Operations Manual

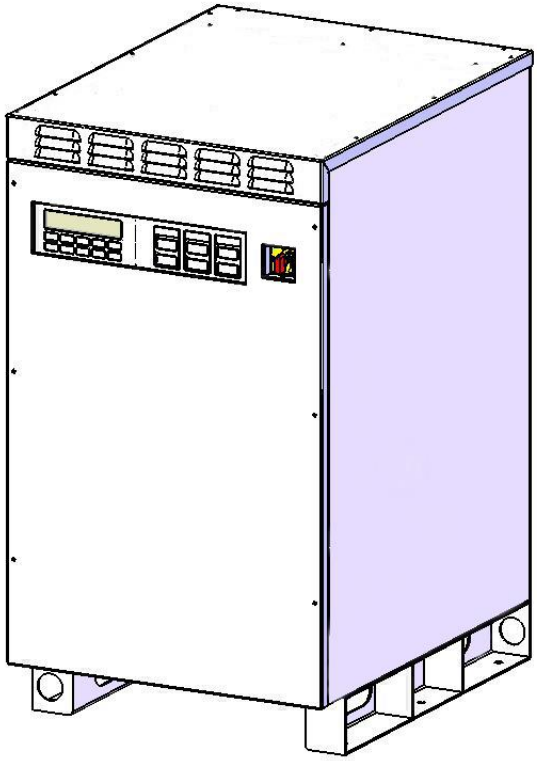

for the ASEA Power Systems
Model AC55LC-3, AC63LC-3, and AC75LC-3,
3 Phase Shore Power Converters
(for Motor Yachts)

P/N 616050 Rev. B
Issued 4/16/2014

CERTIFICATION

ASEA Power Systems certifies that this product was thoroughly tested and inspected and found to meet or exceed its published specifications when shipped from the factory.

WARRANTY

ASEA Power Systems warrants each unit to be free from defects in material and workmanship. For a period of 18 months after purchase or 12 months after installation (whichever is shorter), ASEA Power Systems will repair or replace any defective module provided the unit has been installed and operated in a manner according to this manual. A thorough inventory of spare parts & modules is maintained at our factory. Our world-wide sales/support facilities also inventory a complement of spare parts and modules.

ASEA Power Systems is not responsible for consequential damage arising from the use of its equipment. It does not apply to extensively modified or non-standard systems. Debit memos for returned units are not accepted, and will cause return of the system without repair.

LIFE SUPPORT POLICY

ASEA Power Systems does not authorize the use of any of its products or systems for use an AC voltage supply (source) for life support systems. Life support systems are devices which support or sustain life, and whose failure to perform, when properly used in accordance with this Operations Manual, can be reasonably expected to result in significant injury to the user.

1 USING THIS MANUAL

This manual has been written as an Operations Manual. Installation, Operations, and Preventative Maintenance are covered in detail. This manual will cover the following models:

AC55LC-3	55kVA 3 Phase Yacht Power Converter
AC63LC-3	63kVA 3 Phase Yacht Power Converter
AC75LC-3	75kVA 3 Phase Yacht Power Converter

Please note that each converter is capable of being paralleled for higher power applications.

The Model AC55LC-3 can be paralleled to produce the following models:

AC110LC-3/2	110kVA 3 Phase Yacht Power Converter
AC220LC-3/4	220kVA 3 Phase Yacht Power Converter

The Model AC63LC-3 can be paralleled to produce the following models:

AC125LC-3/2	125kVA 3 Phase Yacht Power Converter
AC250LC-3/4	250kVA 3 Phase Yacht Power Converter

The Model AC75LC-3 can be paralleled to produce the following models:

AC150LC-3/2	150kVA 3 Phase Yacht Power Converter
AC300LC-3/4	300kVA 3 Phase Yacht Power Converter

It is important that the operator reads this manual prior to installing and operating the converter. A thorough understanding of the information covered in this manual is required for proper installation and operation.

If any questions arise while reading this manual, the user is encouraged to call ASEA Power Systems. ASEA Power Systems is located at:

ASEA Power Systems
15602 Commerce Lane
Huntington Beach, CA. 92649-1604
Phone (714) 896-9695
FAX (714) 896-9679
Web http://www.aseapower.com

TABLE OF CONTENTS

WARRANTY 2

1 USING THIS MANUAL 3
2 SAFETY NOTICES 6
3 INTRODUCTION TO THE CONVERTERS 8
4 SPECIFICATIONS 11
4.1 ELECTRICAL SPECIFICATIONS 11
4.1.1 Input Service 11
4.1.2 Output Service 12
4.1.3 Control, Metering, and Status 12
4.2 PHYSICAL SPECIFICATIONS 13
4.2.1 Mechanical 13
4.2.2 Environmental 13
4.2.3 Coolant Requirements 13
5 INSTALLATION 15
5.1 MECHANICAL INSTALLATION 16
5.2 WATER LINE PLUMBING 19
5.3 ELECTRICAL INSTALLATION 21
5.3.1 Input Power Connections 22
5.3.2 Output Power Connections 22
5.3.3 Grounding 24
5.3.4 Multi-Cabinet Connections 25
5.3.5 Seamless Transfer Connections 26
5.3.6 Other Optional Connections 27
6 OPERATION 28
6.1 POWER TURN-ON PROCEDURE 28
6.1.1 Systems Not Equipped With The Seamless Transfer Option 30
6.1.2 Systems Equipped With The Seamless Transfer Option 31
6.2 MULTI-CABINET TURN-ON PROCEDURE 33
6.3 AUTO-RESTART FEATURE 34
6.3.1 Operation 35
6.4 TURN-OFF PROCEDURE 36
6.4.1 Systems Not Equipped With The Seamless Transfer Option 36
6.4.2 Systems Equipped With The Seamless Transfer Option 37
6.5 REMOTE COMMUNICATION 38
6.5.1 RS-232C/SCPI 39
6.5.2 RS-485/Modbus 40

7 SOFTWARE FEATURES....43
7.1 GENERAL....43
7.2 LOAD MANAGEMENT....43
7.3 LOAD MANAGEMENT OPERATION....45
7.3.1 Shore Cord Alarm, Single, Master, and Slave converters....45
7.3.2 Shore Cord Setup, Single, Master, or Slave Converters....46
7.3.3 Voltage Droop, Single or Master Converters....47
7.3.4 Automatic Transfer to Generator, Single or Master Converters (Seamless Transfer installed)....48
7.3.5 Quick Setup of Shore Cord Alarm, Single, Master, or Slave Converters..49
7.4 GENERATOR FREQUENCY ANALYSIS....50
7.5 CONVERTER OUTPUT IMPEDANCE CONTROL....50
7.6 AGC CONTROL....51
7.7 kW-HOUR METER AND MAXIMUM POWER LEVEL DISPLAY....52
7.8 CONVERTER OUTPUT VOLTAGE CONTROL....53
7.9 EVENT LOG....54
8 DIAGNOSTICS....56
9 CALIBRATION....59
10 MAINTENANCE....61
11 MSDS SHEET, COOLANT OIL....62
12 INTERNATIONAL POWER FORM REFERENCE....69

FIGURES

1 SYSTEM BLOCK DIAGRAM....8
2 OIL-TO-WATER COOLING SYSTEM BLOCK DIAGRAM....10
3 OUTPUT DERATING....14
4 MECHANICAL OUTLINE, FRONT AND SIDE....17
5 MECHANICAL OUTLINE, BASE....18
6 WATER LINE INSTALLATION....20
7 INPUT AND OUTPUT CONNECTIONS....23
8 N/A....
9 FRONT PANEL CONTROLS....28
10 RS-232C PINOUT....39
11 RS-485 CONNECTIONS....40
12 STATUS WORD BIT DEFINITIONS....58

2 SAFETY NOTICES

Each shore power converter is capable of transferring large amounts of electrical energy very quickly. This quality is fundamental to a high performance power converter. International symbols are used throughout this manual to stress important information. Read the text below each symbol carefully and use professional skills and prudent care when performing the actions described by the text.

⚠ CAUTION ⚠

THE CAUTION SYMBOL (TRIANGLE ENCLOSING AN EXCLAMATION POINT) INDICATES A CONDITION THAT COULD SERIOUSLY DAMAGE EQUIPMENT AND POSSIBLY INJURE PERSONNEL. CAUTIONS WILL BE PRESENTED IN THIS FORM. ALL CAUTIONS SHOULD BE RIGOROUSLY OBSERVED.

⚠ WARNING ⚠

THE WARNING SYMBOL (TRIANGLE WITH A LIGHTNING BOLT) IS USED TO SIGNAL THE PRESENCE OF A POSSIBLE SERIOUS, LIFE THREATENING CONDITION. A CONDITION THAT IS HAZARDOUS TO BOTH PERSONNEL AND EQUIPMENT WILL BE ISSUED AS A WARNING. ALL WARNINGS WILL BE PRESENTED IN THIS FORM.

⚠ WARNING ⚠

- **THIS EQUIPMENT CONTAINS HIGH ENERGY, LOW IMPEDANCE CIRCUITS! LETHAL POTENTIALS ARE CONTAINED WITHIN THE SYSTEM EVEN WHEN IT APPEARS TO NOT BE OPERATING.**
- **CARE MUST BE EXERCISED WHEN SERVICING THIS EQUIPMENT IN ORDER TO PREVENT SERIOUS OPERATOR INJURY OR EQUIPMENT DAMAGE.**
- **DO NOT WORK ON OR OPERATE THIS EQUIPMENT UNLESS YOU ARE FULLY QUALIFIED TO DO SO. NEVER WORK ALONE.**
- **THE EQUIPMENT IS NOT IGNITION RATED, IT MUST NOT BE OPERATED IN AREAS WHERE COMBUSTIBLE GASES MAY ACCUMULATE.**
- **THIS EQUIPMENT CONTAINS HYDRAULIC FITTINGS AND EMPLOYS A COOLANT OIL. DO NOT ATTEMPT TO SERVICE THE HYDRAULIC SYSTEM WITHOUT THE ASSISTANCE OF FACTORY AUTHORIZED PERSONNEL.**
- **THE HEAT EXCHANGER HAS WATER SYSTEM THAT IS UNDER PRESSURE. NEVER OPEN THE WATER CONNECTIONS UNLESS THE WATER SYSTEM HAS BEEN SHUT OFF AT IN THE SUPPLY AND RETURN LINES.**
- **OBSERVE THE FOLLOWING WHEN SERVICE AND MAINTENANCE ARE REQUIRED:**
  - **REMOVE ALL JEWELRY FROM ARMS AND NECK WHEN SERVICING THIS EQUIPMENT. THIS PREVENTS THE POSSIBILITY OF SHORTING THROUGH THE JEWELRY, OR ELECTROCUTION OF THE OPERATOR.**
  - **WEAR SAFETY GLASSES WHEN SERVICING THIS EQUIPMENT TO PREVENT EYE INJURY DUE TO FLYING PARTICLES CAUSED BY ACCIDENTAL SHORT CIRCUIT CONDITIONS.**
  - **DO NOT REMOVE ANY PANELS OR COVERS WITHOUT FIRST OPENING ALL SHORE POWER AND SWITCHGEAR CIRCUIT BREAKERS DISTRIBUTING POWER TO AND FROM THE CONVERTER, AND THEN REMOVING THE INPUT SERVICE.**
  - **SERVICE SHOULD BE REFERRED TO PERSONNEL AUTHORIZED BY THE FACTORY TO SERVICE THIS EQUIPMENT.**

3 INTRODUCTION TO THE CONVERTERS

The AC55LC-3, AC63LC-3, and AC75LC-3 are high performance Shore Power Converters. These models are internally oil-cooled, where a customer-managed water cooling loop carries away heat energy from the cooling oil via a base-mounted heat exchanger. The main oil reservoir is sealed to the point that it is splash-proof; therefore, the converter must remain vertical at all times. As a result, these converters are intended for motor yachts and cannot be used with sailing yachts, catamarans, or any other vehicle that may spend time heeled.

These converters will accept any three phase input service with a frequency between 40-70Hertz, and a voltage between 170-520VAC. The output power form has been programmed at the factory for the voltage and frequency required by your yacht.

Dual-conversion technology is the preferred technique for AC power conversion, and was chosen for the system design. In this technology, the shore power service is isolated by the transformer and then converted to DC power by the DC power supply module. The output inverters then convert the DC power back to the required AC form (both voltage and frequency) required by the yacht.

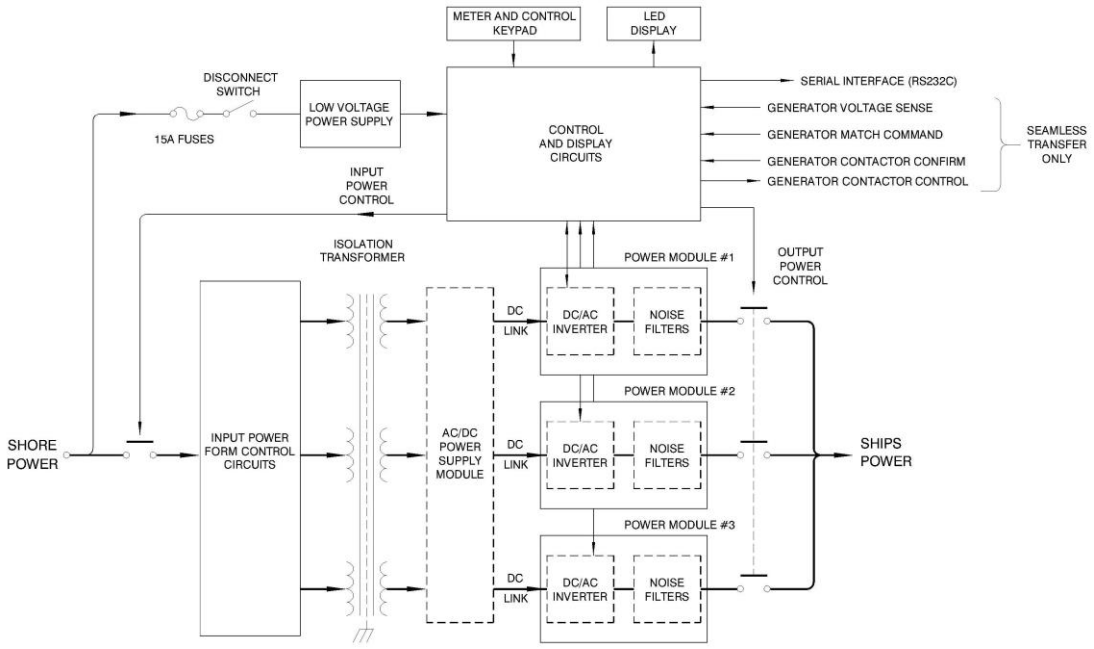

FIGURE 1 SYSTEM BLOCK DIAGRAM

Being a converter designed from the ground up specifically for the yachting industry, all efforts have been made to produce a system capable of withstanding the marine environment. All system components are packaged in one drip-proof, dust-resistant stainless steel enclosure. Major components are internally modular, allowing a simple exchange in the unlikely event of failure. Complete maintenance and service can be provided with only front and top access to the system. Three lightweight power modules can be removed and replaced through the front and top panels for repair or power level upgrade.

System operation is managed through three basic operators. A safety disconnect on the front of the enclosure is used for securing input service during maintenance and service. Three membrane switch groups in the control console, SHORE POWER, CONVERTER POWER, and SHIP'S POWER, provide normal operation of the system. Each switch group contains an ON and OFF switch with associated LED indicators.

In addition to the basic function of power conversion, each converter provides the user with a sophisticated power analysis and monitoring capacity. All parameters for input and output power, along with operations and status information, are available on the front panel display console. Various displays are selected through a long life, sealed membrane switch panel.

For additional information on controls and indicators, please refer to Section 6.

System cooling is accomplished through a primary, oil-to-water based exchange system as well as a supplemental forced-air cooling system. The main isolation transformer and output filter inductors are immersed in an oil which then circulates through cooling plates where input rectifiers and output transistors (IGBTs) are mounted. The oil further circulates through a liquid-to-liquid heat exchanger where the oil transfers its heat energy into the customer-supplied coolant water also circulating through the heat exchanger. These heat exchangers intended for fresh chilled water a water/coolant mix.

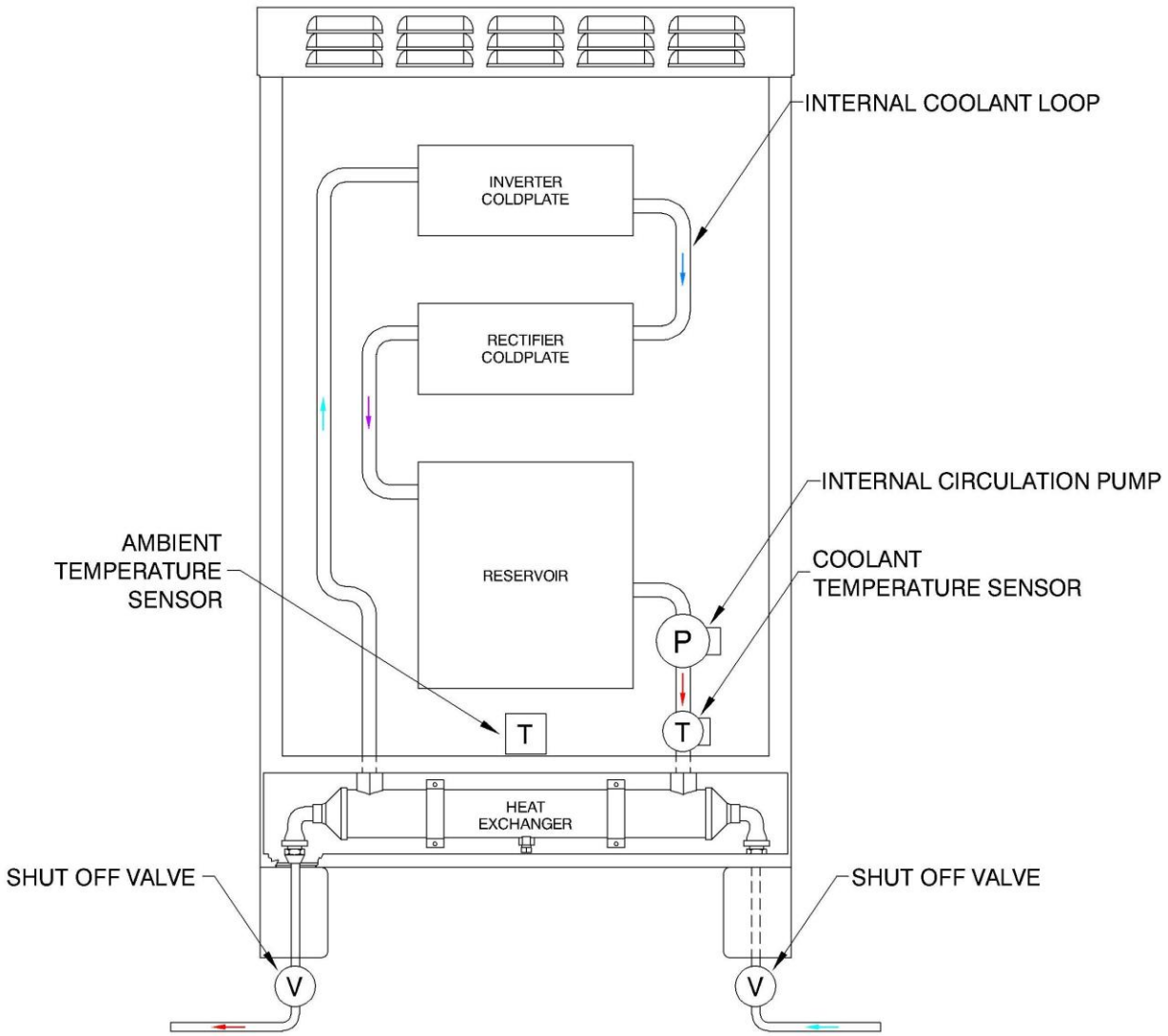

FIGURE 2 OIL-TO-WATER COOLING SYSTEM BLOCK DIAGRAM

4 SPECIFICATIONS

4.1 ELECTRICAL SPECIFICATIONS

Parameter	AC55LC-3	AC63LC-3	AC75LC-3
4.1.1 Input Service			
Input Power Form	Three Phase	Three Phase	Three Phase
Input Voltage Range	170-520V_{AC}	170-520V_{AC}	170-520V_{AC}
Input Frequency Range	40-70 Hertz	40-70 Hertz	40-70 Hertz
Input Current, Max. Three Phase	152 A_{RMS}	175 A_{RMS}	209 A_{RMS}
Input Current, Soft Start, Max.	36 A_{RM}	36 A_{RMS}	36 A_{RMS}
Input Current Distortion	<8% THD @ rated load	<8% THD @ rated load	<8% THD @ rated load
Input Power Factor	>0.98 @ rated load	>0.98 @ rated load	>0.98 @ rated load
4.1.2 Output Service			
Output Power Rating	55kVA @ 0.85 p.f.	63kVA @ 0.85 p.f.	75kVA @ 0.85p.f.
Output Power Form	Three-Phase 120/208V_{AC}, 127/220V_{AC}, 220/380 V_{AC}, 230/400 V_{AC}, 240/416 V_{AC}, 254/440 V_{AC}, and 277/480V_{AC}		
Output Frequency	50 or 60 Hertz	50 or 60 Hertz	50 or 60 Hertz
Output Frequency Accuracy	0.01%	0.01%	0.01%
Output Voltage Distortion	< 1% THD	< 1% THD	< 1% THD
Output Voltage Line Regulation	0.50%	0.50%	0.50%
Output Voltage Load Regulation	1.0%	1.0%	1.0%
Output Voltage Response Time	0.20 msec.	0.20 msec.	0.20 msec.
Output Current, Continuous	Refer to Table 1 on page 12 for basic ratings.		
Output Current, Peak	625% of cont. rating	540% of cont. rating	460% of cont. rating
Output Current, Surge	435% of cont. rating	380% of cont. rating	320% of cont. rating
Conversion Efficiency	92% @ rated load	92% @ rated load	92% @ rated load

4.1 ELECTRICAL SPECIFICATIONS, cont.

4.1.2 Output Service, cont.

Table 1 - Output Current, Rated Continuous RMS

Output Form	AC55LC-3	AC63LC-3	AC75LC-3
3Ø, 277/480V_{RMS}	66A_{RMS}/Ø	76A_{RMS}/Ø	90A_{RMS}/Ø
3Ø, 254/440V_{RMS}	72A_{RMS}/Ø	83A_{RMS}/Ø	98A_{RMS}/Ø
3Ø, 240/416V_{RMS}	76A_{RMS}/Ø	88A_{RMS}/Ø	104A_{RMS}/Ø
3Ø, 230/400V_{RMS}	80A_{RMS}/Ø	91A_{RMS}/Ø	109A_{RMS}/Ø
3Ø, 220/380V_{RMS}	83A_{RMS}/Ø	95A_{RMS}/Ø	114A_{RMS}/Ø
3Ø, 127/220V_{RMS}	144A_{RMS}/Ø	165A_{RMS}/Ø	197A_{RMS}/Ø
3Ø, 120/208V_{RMS}	152A_{RMS}/Ø	175A_{RMS}/Ø	209A_{RMS}/Ø

4.1.3 Control, Metering, and Status

Input Power Control	Input Service Disconnect Switch, 2 pos.
Shore Power Control	Membrane Switch, Input ON/OFF Control
Converter Power Control	Membrane Switch, Output ON/OFF Control
Ship’s Power Control	Membrane Switch, Generator/Shore Power Transfer Control
Shore Power Metering	Voltage, Current, Frequency, kVA, kW, %Load
Converter Power Metering	Voltage, Current, Frequency, kVA, kW, %Load
Generator Power Metering	Generator 1 & 2 Voltage, Frequency
	(Optional) Current, kVA, kW, %Load
System Status	Operational status, Diagnostics, Software Calibration

4.2 PHYSICAL SPECIFICATIONS

4.2.1 Mechanical

Parameter

Height	42.0" / 107cm
Width, Enclosure	23.75" / 60.3cm
Depth	30.0" / 76.2cm
Weight AC55LC/AC63LC/AC75LC	1,350lbs / 612kg

4.2.2 Environmental

Ambient Temperature Range	0-45°C non-condensing (see derating chart on the following page)
Air Exchange Rate	150CFM

4.2.3 Coolant Requirements

Water Flow Rate *	4-10 GPM range (minimum and maximum, respectively)
Coolant Flow Rate *	8-16 GPM range (minimum and maximum, respectively)
Water/Coolant Flow Min. Rate *	4 + (4 * Percent Coolant) e.g. 100% coolant mix, 4 + (4 *1.00) = 8 GPM 50% coolant mix, 4 + (4 *0.50) = 6 GPM
Water/Coolant Temperature *	4-10°C for full output power capability. See derating chart on the next page for operation at other temperatures.
Water/Coolant Pressure	4 bar maximum

* The minimum required water flow rate and temperature combination curve, along with the two derating curves, are used to specifically address one or another non-optimal coolant supply condition. If the shipyard or customer expects multiple non-optimal conditions to exist, the factory must be contacted. For example, if elevated coolant temperatures are too be used while also operating with an elevated ambient temperature, the factory can estimate the combined derating that applies.

4.1 ELECTRICAL SPECIFICATIONS, cont.

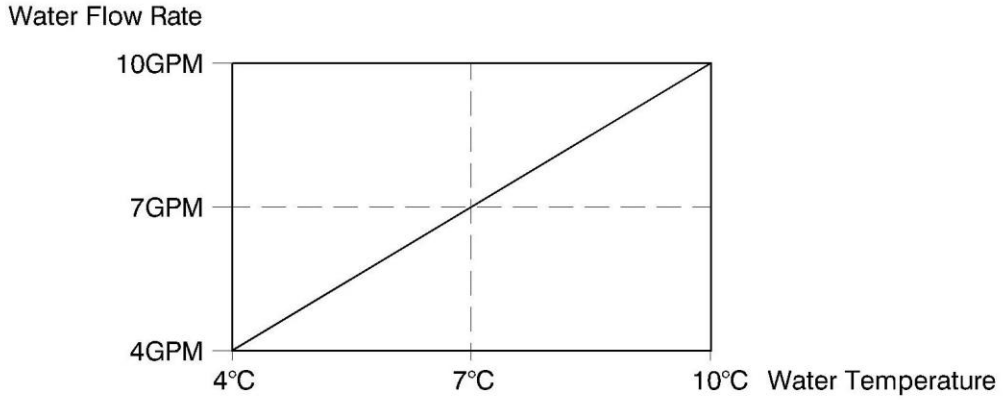

MINIMUM REQUIRED WATER FLOW RATE AND TEMPERATURE COMBINATION

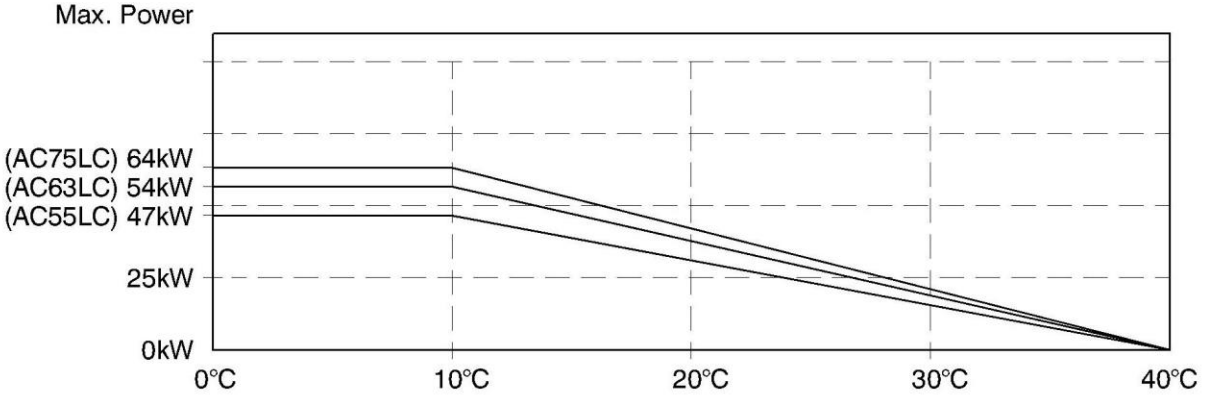

OUTPUT DERATING DUE TO COOLANT WATER TEMPERATURE

FLOW RATE AND WATER TEMPERATURE TO BE IN ACCORDANCE WITH CURVE ABOVE

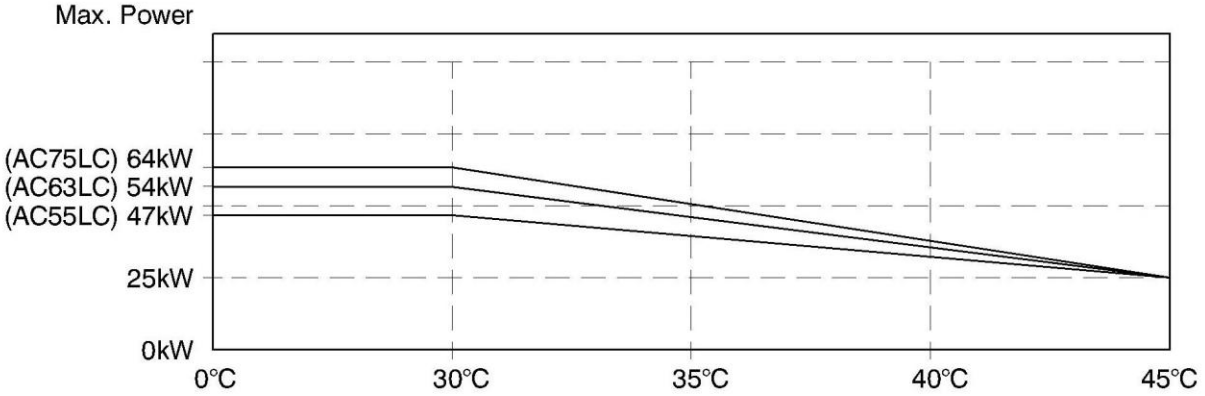

OUTPUT DERATING DUE TO AMBIENT TEMPERATURE

FLOW RATE AND WATER TEMPERATURE TO BE IN ACCORDANCE WITH CURVE ABOVE

FIGURE 3 OUTPUT DERATING

5 INSTALLATION

The installation section is divided into three parts. The first section will cover mechanical installation, the second section water line plumbing, and final section electrical installation. Read this manual thoroughly prior to attempting the installation. Improper installation is the most significant cause of system start-up problems and service issues over the product's life. Upon receipt of the equipment, perform an external visual inspection. Contact the factory immediately if any damage or any coolant oil leak is encountered. Verify that nameplate information is consistent with the ship's power requirements (required form, voltage, and frequency). Proper planning will speed up installation, location, and connection of the equipment. Follow the suggested minimum clearances provided in Table 2.

Ensure the ship's chilled water supply dedicated to the converter's heat exchanger has sufficient thermal capacity to accommodate the thermal load presented by the converter. It will be approximately the following at maximum continuous load: 13,400 BTU/Hr for the AC55LC-3, 15,300 BTU/Hr for the AC63LC-3, and 18,200 BTU/Hr for the AC75LC-3.

Ensure the installation room or compartment has adequate ventilation and cooling. The thermal load presented by the converter through air exchange will be approximately the following at maximum continuous load: 500 BTU/Hr for the AC55LC-3, AC63LC-3, or AC75LC-3.

WARNING

THE CONVERTERS ARE HEAVY, WEIGHING UP TO 1,350lbs DEPENDING UPON MODEL AND INSTALLED OPTIONS. EXTREME CAUTION MUST BE EXERCISED IN HANDLING AND INSTALLATION TO AVOID EQUIPMENT DAMAGE OR INJURY TO PERSONNEL. AN ADEQUATE MATERIAL HANDLING DEVICE SHOULD BE USED FOR UNLOADING, MOVING, AND POSITIONING THE SYSTEM. THE CONVERTERS MUST STAY IN A COMPLETELY VERTICAL ORIENTATION OR OIL LEAKAGE WILL OCCUR.

5.1 MECHANICAL INSTALLATION

The converters were designed for deck mount installations and as such are provided with six mounting holes, three per side. Mounting holes have been provided with 1/2" (12.7mm) diameters; stainless steel hardware in the range of 3/8" to 7/16" (10-11mm) diameter is required.

The mounting surface should be flat and dimensionally stable to within 1/16" (1.5mm) to prevent torsional stresses being applied to the structure of the converter. Spacers (shim stock) may be added between the mounting surface and the converter mounting flanges to adjust the mounting plane. If the system is to be mounted in a high vibration/shock environment, then the factory must be consulted concerning the application. Drawings for approved shock mounting assemblies will be supplied.

Due to the available variations in the LC series cabinet configurations, please refer also to available Installation and Mounting Drawing for clearance and ventilation paths.

Table 2	FOR PROPER:	
	Operation	Service
Front	4" (Exhaust airflow)	24" min
Top	0"	6"
Rear	2" (Intake airflow)	0"

Air intake louvers are provided at the rear-top area of the converter. Air exhaust louvers are provided at the front-top area of the converter. Please contact factory engineers for review of the installation plan if unsure about any specification or requirement.

The converter must remain vertical at all times due to the coolant oil reservoir characteristics. Movement may only occur with the converter in the vertical orientation.

5.1 MECHANICAL INSTALLATION, cont.

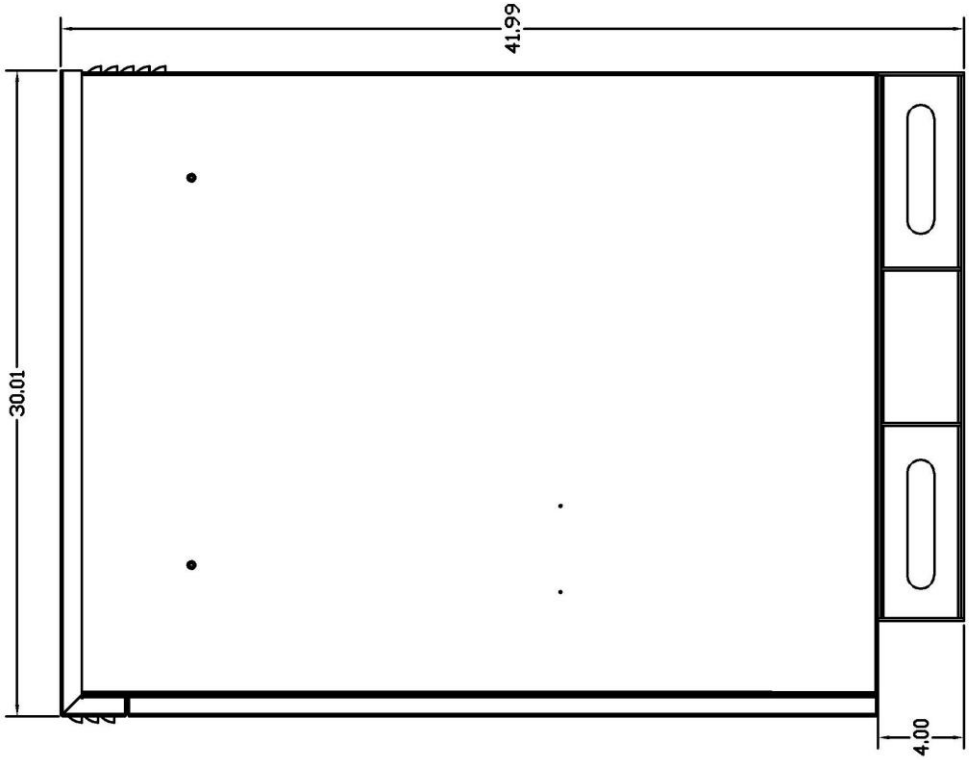

FIGURE 4 MECHANICAL OUTLINE, FRONT AND SIDE

5.1 MECHANICAL INSTALLATION, cont.

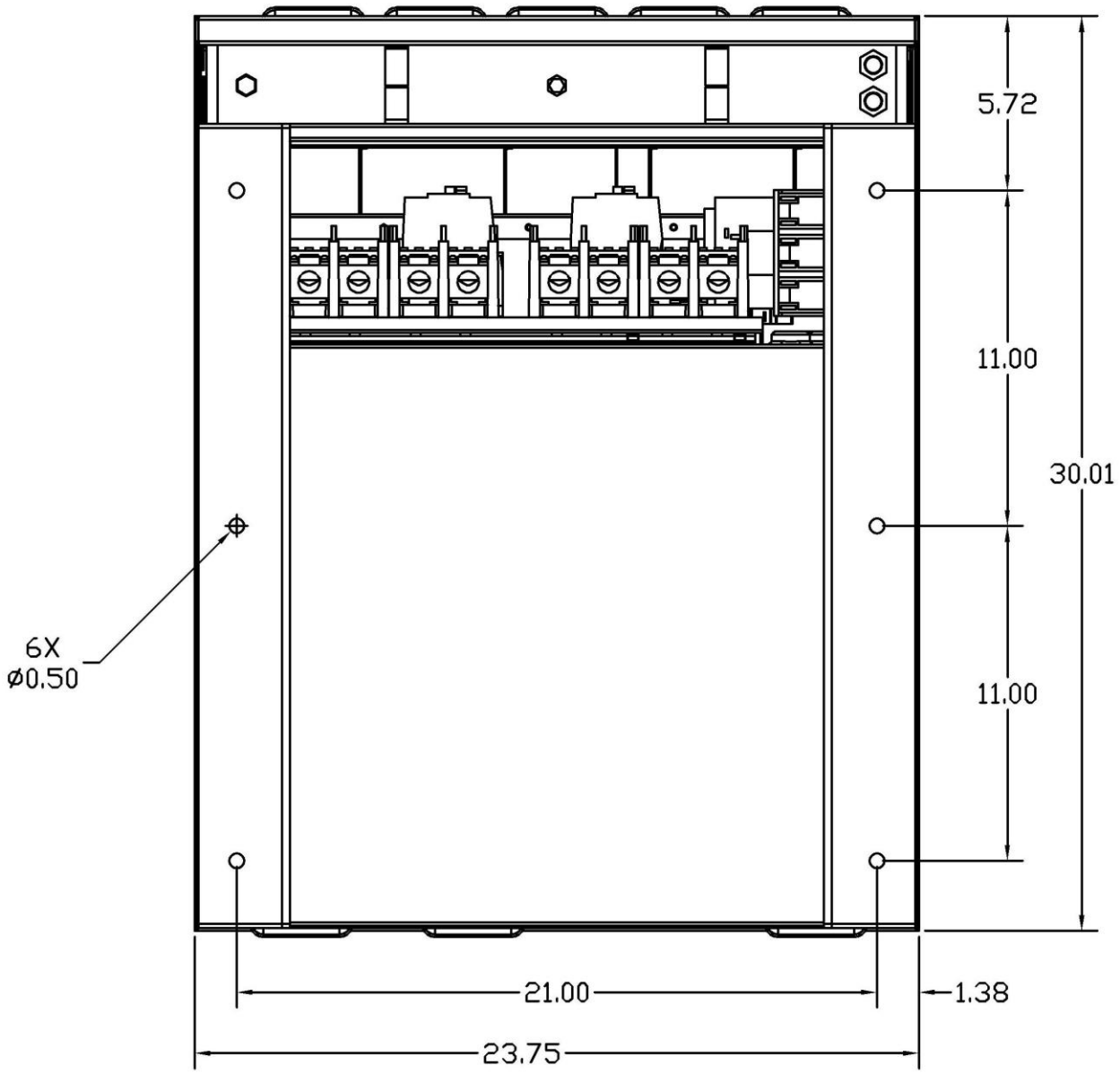

FIGURE 5 MECHANICAL OUTLINE, BASE

5.2 WATER LINE PLUMBING

- All water line connections are to be made using 1/2" NPT fittings. Use Teflon sealant to ensure that no leakage will occur.

- Isolation valves must be installed locally for maintenance purposes, and so that shutoff can occur in the event of a water leak.

- The ASEA-supplied Flow Control Solenoid must be installed and located within 24" of the bottom right front corner of the converter as dictated by the supplied control cable length. The ASEA-supplied Flow Control Solenoid is directional and must be installed in accordance with the marking in the brass body at the inlet side.

- Condensation may occur on the heat exchanger body based on humidity levels in the environment. The installer should design the area around the converter accordingly. If insolation is added to the exchanger, DO NOT insulate the body of the Flow Control Solenoid.

- To ensure that no air becomes trapped in the heat exchanger unit, route the water return line above the level of the heat exchange unit before connection to the return main.

- The heat exchanger unit is constructed of 90/10 cuprous nickel. There is a zinc pencil anode located on the heat exchanger unit end bell.

- No maintenance need be performed on the heat exchanger unit other than periodic checking of the zinc pencil anode when used in a chilled, fresh water system.

- A water flow rate greater than 16 GPM (Gallons Per Minute) is wasteful and can accelerate water erosion of the heat exchange unit’s cuprous nickel piping.

5.2 WATER LINE PLUMBING, cont.

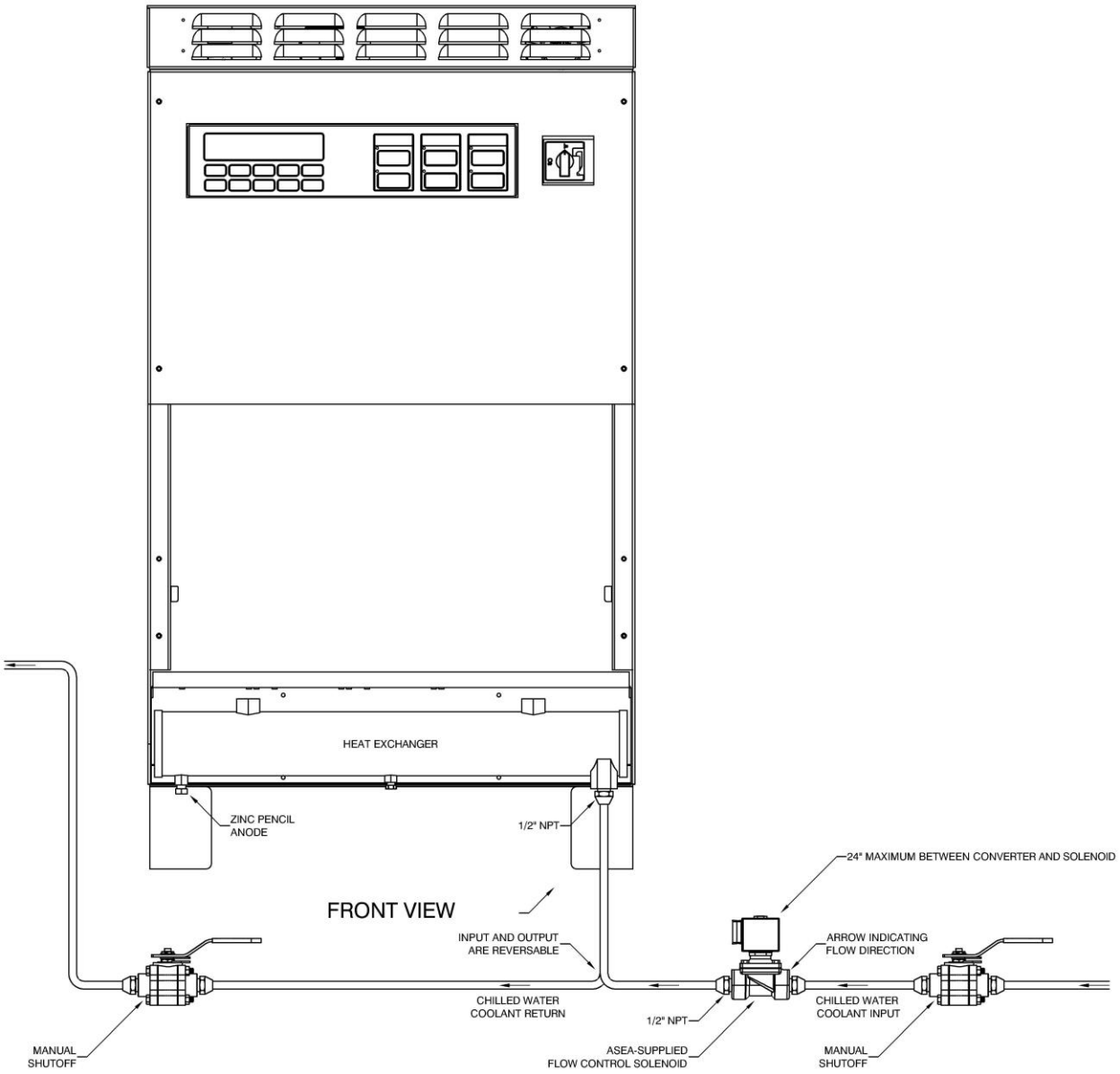

FIGURE 6 WATER LINE PLUMBING

5.3 ELECTRICAL INSTALLATION

This procedure assumes the physical installation of the converter has been completed.

It is the installer's responsibility to provide input service over-current protection and disconnect means.

It is recommended that connection be made to the distribution bus through a manually operated disconnect device such as a molded case switch or circuit breaker (rated for the total system amperage) to ease disconnection and provide a safe servicing environment in the event of converter failure.

Follow the table below when considering shore power input cabling.

MAXIMUM CURRENTS UNDER LOW-LINE CONDITIONS:

Model	**AC55LC-3**	**AC63LC-3**	**AC75LC-3**
Input Current			
Three-Phase, 170-290VAC	180A	200A	230A
Three-Phase, 330-520VAC	90A	105A	125A

MAXIMUM OUTPUT CURRENTS: Refer to Table 1, page 12

All power wiring requires the removal of the front panel and cable safety cover. The front cover is secured with 6 ea #10 stainless steel screws.

Re-install the front panel using the removed hardware. Place the disconnect switch in the OFF position.

5.3 ELECTRICAL INSTALLATION, cont.

WARNING

INPUT WIRING MUST BE PERFORMED BY A QUALIFIED ELECTRICIAN FAMILIAR WITH STANDARD SAFEGUARDS AND PROCEDURES REQUIRED BY THE INSTALLATION OF THIS TYPE OF EQUIPMENT. POWER MUST BE REMOVED FROM THE INPUT DISTRIBUTION SYSTEMS SUPPLYING POWER TO THE AC55LC-3, AC63LC-3, OR AC75LC-3 PRIOR TO THE START OF THE FOLLOWING STEPS. INPUT POWER MUST BE SECURED (LOCKED) IN THE OFF (DE-ENERGIZED) STATE UNTIL INSTRUCTED OTHERWISE BY THIS DOCUMENT. ALSO SECURE IN THE OFF STATE ANY CIRCUIT BREAKER(S) IN THE SWITCHGEAR PANEL THAT MAY BE SUPPLYING SHIP'S BUS POWER TO THE CONVERTER OUTPUT TERMINAL BLOCK. FAILURE TO FOLLOW THESE PROCEDURES CAN RESULT IN DAMAGE TO THE EQUIPMENT, AND CAN PRESENT THE RISK OF INJURY OR DEATH TO THE INSTALLER OR THE OPERATOR.

5.3.1 Input Power Connections

The converter is supplied with compression type terminal blocks for input power connections. These terminal blocks accept wire in the range of 350MCM to 6AWG. Refer to the applicable standards for selection of required wire gauge and type. In two or more cabinet systems, one shore cord is connected to each converter shore power terminal block.

5.3.2 Output Power Connections

The converter is supplied with compression type terminal blocks for input power connections. These terminal blocks accept wire in the range of 350MCM to 6AWG. Refer to the applicable standard for selection of the required wire gauge and type. The output ground wire is to be connected to a 3/8-16 UNC stud. Please refer to the Figure 7 on page 23 for additional detail.

5.3 ELECTRICAL INSTALLATION, cont.

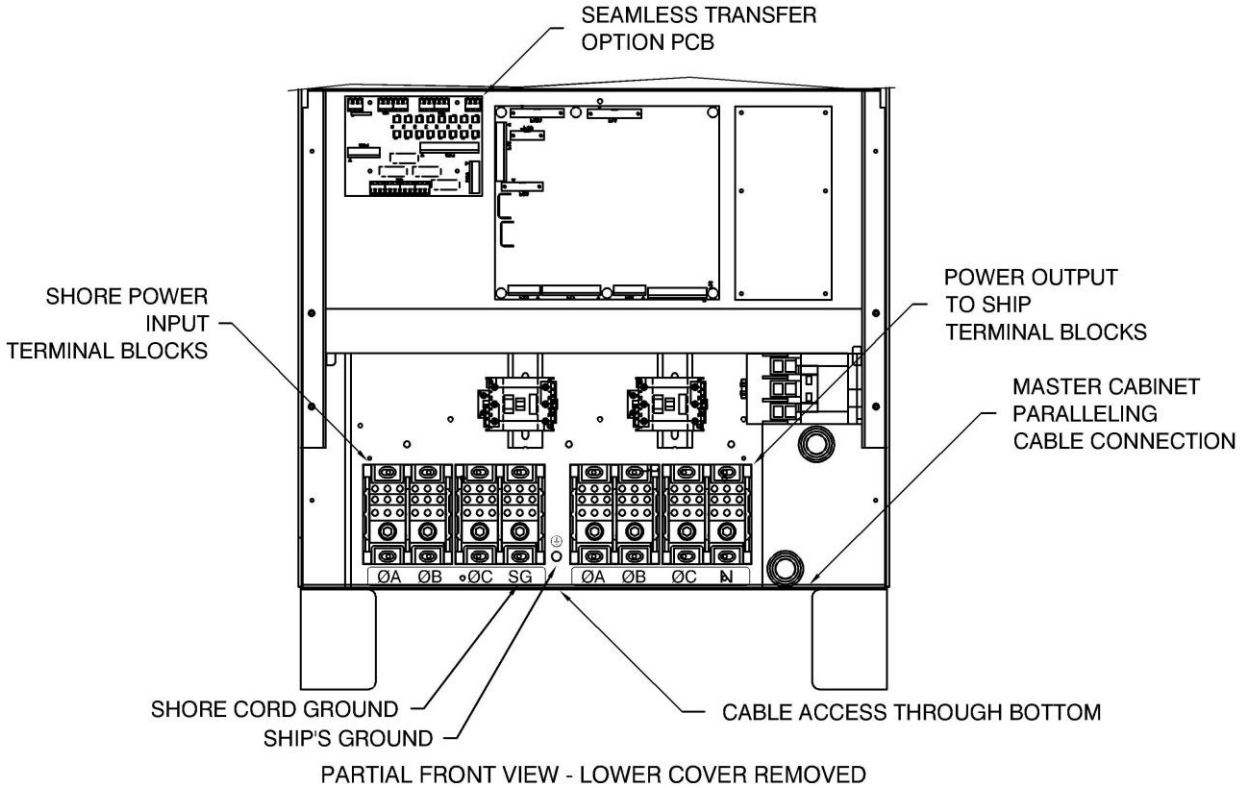

FIGURE 7 INPUT AND OUTPUT CONNECTIONS

Prepare the power cables by removing approximately 6” of the outer cable insulation (in the case of SO type portable cables). Strip the insulation back exposing 1” of the bare conductor for all input, output , and grounding conductors. Insert the prepared cables and strain relief assemblies into the prepared holes in the cable access cover. Insert the terminated wire ends into the appropriate input/output terminal block and tighten. Replace the power cable access cover and front panel using the removed hardware.

5.3 ELECTRICAL INSTALLATION, cont.

5.3.3 Grounding

The converter chassis ground MUST be connected to the ship's hull or common ground point via the 3/8" ground stud adjacent to the output power connections. Failure to do so may create conditions that may in turn cause injury or death to operators; failure to do so will also result in the voiding of the equipment warranty. In the case of paralleled converter systems, and where such ground connections are not local and directly adjacent to the paralleled converters, the chassis ground connections must be interconnected between the paralleled converters as well as connected to the remote ship's common ground point.

WARNING

THE CONVERTER ISOLATES THE OUTPUT POWER FROM THE INPUT POWER AND EQUIPMENT (SAFETY) GROUNDS SIMILAR TO AN ISOLATION TRANSFORMER. THE INSTALLER MUST RE-ESTABLISH THE GROUND REFERENCE FOR THE EQUIPMENT AT TIME OF INSTALLATION. NEUTRAL AND EQUIPMENT (SAFETY) GROUNDS TO BE CONNECTED PER THE APPROPRIATE CLASS STANDARD.

5.3 ELECTRICAL INSTALLATION, cont.

5.3.4 Multi-Cabinet Connections

Multi-cabinet systems should have each cabinet's output connections paralleled at the switchgear panel. The converters' terminal blocks are sized for a single, appropriated sized cable per phase, neutral, and grounding conductor.

Multi-cabinet systems are constructed from one cabinet which serves as the system Master, and an additional cabinet(s) which serves as the Slave(s). A paralleling cable assembly (*P/N 605150*) is shipped pre-connected to the Slave cabinet and coiled at the base of the cabinet near the Input and Output connection terminal blocks. It must be connected to one of the indicated 604173 or 616178 Modulator Interface PCB connectors at the base of the Master cabinet (see Figure 7 on page 23 for details). Do not substitute cable assemblies. If a longer cable is needed for a given installation, contact the factory for the appropriate cable.

5.3 ELECTRICAL INSTALLATION, cont.

5.3.5 Seamless Transfer Connections

If the Seamless Transfer Option was ordered with the system, connections must be made between the generator/switchgear and converter. These connections are used by the converter to successfully manage Seamless Transfer operation and are comprised of control, signal, and feedback functions. These connections are only required in the Master cabinet of a multi-cabinet installation. Use of 14-18AWG wire is recommended for signal and control wiring.

A variety of Seamless Transfer Option types exist. These include two generator, three and four generator, Hybrid (switchgear cooperative), and Clean Bus types. Installation requirements for such options vary in accordance with switchgear design and hence are beyond the scope of this Operations Manual.

Contact the factory for complete and specific system wiring drawings. These can be supplied in either printed or electronic format.

The Seamless Transfer Option uses momentary control signals to operate switchgear contactors or circuit breakers that mange generator connection to the ship's distribution bus. The control pulse width for these momentary control signals is 0.6 seconds for both the open and close commands. The contacts used for generator control are rated for a maximum of 8A @250VAC or 5A @24VDC.

The generator contactor or circuit breaker must be equipped with an auxiliary switch contact set—closed when the main contacts are closed.

Generator voltage sense wires are used by the converter to match its output voltage, frequency, and phase angle to the generator's and should be fused at the generator/switchgear.

5.3 ELECTRICAL INSTALLATION, cont.

5.3.6 Other Optional Connections

In support of the Seamless Transfer Option, or in support of switchgear and/or power monitoring integration, other options may be ordered and installed in a converter. Installation requirements for such options vary in accordance with switchgear design and hence are beyond the scope of this Operations Manual.

Contact the factory for complete and specific

6 OPERATION

6.1 POWER TURN-ON PROCEDURE

Close the shore power (input) circuit breaker or switch to the converter. Turn the disconnect (14) switch to the ON position. After 1-3 seconds, fans will be heard, and the display will become active. Allow the converter to initialize (the display LOAD LEVEL field will change from 0.0 % to a small reading after initialization) before attempting to operate it.

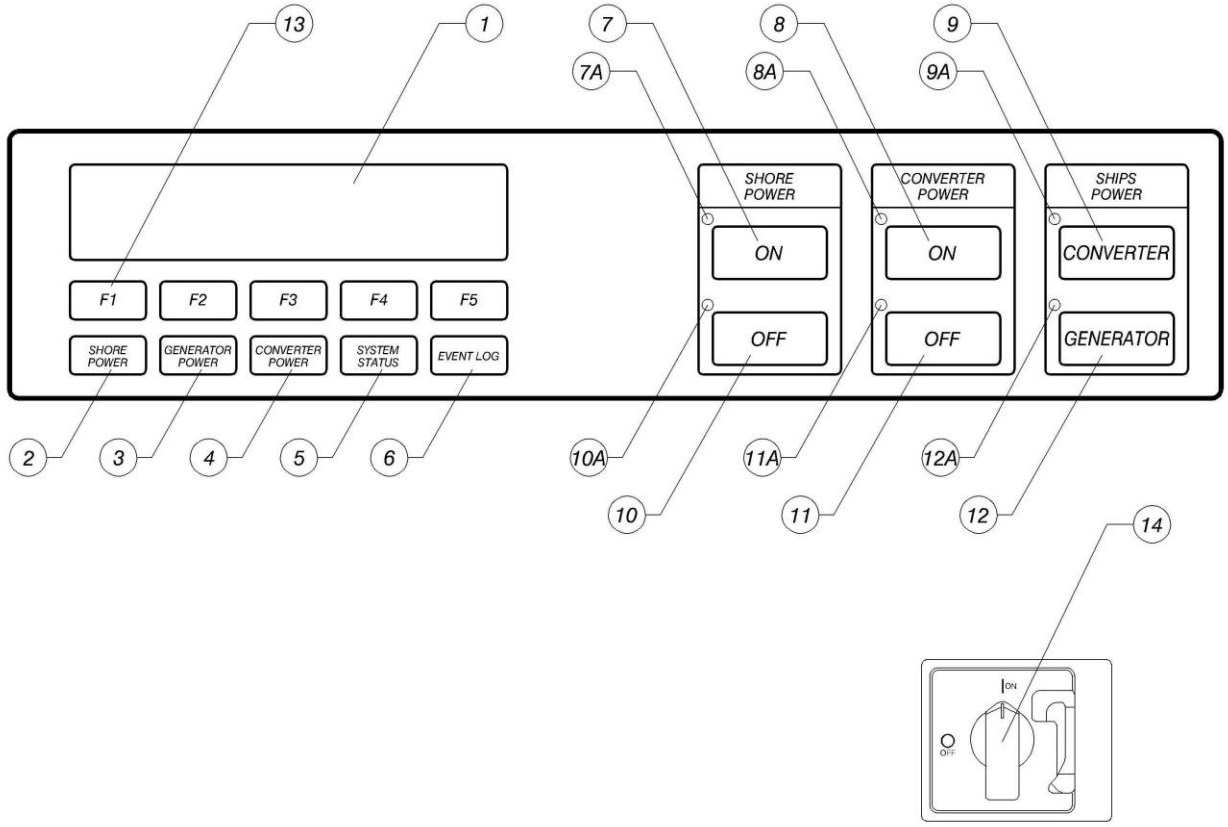

FIGURE 9 FRONT PANEL CONTROLS

6.1 POWER TURN-ON PROCEDURE, cont.

The display will sequence to the SUMMARY DISPLAY indicating the converter's operational state. Both input and output (converter) should indicate OFFLINE at this time. Press the **INFO** (13) button to review the Shore Power state if desired. The INFO screen will either list the Shore Power as ONLINE or give a reason for its being off if it was previously on. A press of the **F3** (13) button in the INFO screen will display the last known converter failure. Return to the SUMMARY DISPLAY at any time by pressing the **SYSTEM STATUS** (5) button.

```
SUMMARY DISPLAY            AC75 MASTER
INPUT: OFFLINE       CONVERTER: OFFLINE
LOAD LEVEL: 0.0 %      AUTO-RESTART: ON
                          INFO   STATUS
```

At this time both of the red LED indicators next to the **OFF** buttons (10A & 11A) should be lit. If the system has been ordered with the Seamless Transfer option, and the generator is on-line, the green LED (12A) to the left of the **GENERATOR** (12) button will be lit.

Press the **SHORE POWER** (2) display button. The display will indicate basic shore power information: voltage, current, and kVA. Press the **F2** (13) button to view kW, Power Factor, frequency, and form. Verify the displayed voltages indicate the expected voltages and frequency. If not, do not proceed until contacting factory personnel. Additional SHORE POWER information can be obtained by pressing the **F3** and **F4** (13) buttons: peak currents and crest currents, percent of system rating, and kVAR. Return to the primary screen by pressing the **F1** (13) button.

```
INPUT #1  PHASE A-B PHASE B-C PHASE C-A
  VOLTAGE:     400V      400V      400V
  CURRENT:       0A        0A        0A
     LOAD:  0.0 kVA   0.0 kVA   0.0 kVA
```

6.1 POWER TURN-ON PROCEDURE, cont.

Press the **CONVERTER POWER** (4) button and the screen will now change. As with the shore power displays, the **F1-F4** (13) buttons will cycle through a variety of converter power data. Output voltages and currents should indicate zero.

```
CONVERTER   PHASE A   PHASE B   PHASE C
  VOLTAGE:     0/0V      0/0V      0/0V
  CURRENT:       0A        0A        0A
     LOAD:  0.0 kVA   0.0 kVA   0.0 kVA
```

To turn on the converter, press the **SHORE POWER ON** (7) button. The converter will begin a soft-start procedure which requires approximately 2 seconds to complete. At the conclusion of this process, the indicator LEDs (10A & 7A) in the SHORE POWER control area of the display should change from red to green. View the display information for **CONVERTER POWER** (4) and verify that the displayed voltage is at the desired potential, frequency, and form. The system is now in the Standby State.

NOTE: *It is normal under no load conditions for the currents to indicate 3-6 Amps flowing. This level of current is due to the internal filters and will not reduce the converter's power rating.*

6.1.1 Systems Not Equipped With The Seamless Transfer Option

When ready to transfer the ship's load to the converter, press the **CONVERTER POWER ON** (8) button on the control panel. This will place voltage at the output terminals of the converter. The green ON indicator LED (8A) should now be lit. The ship's load may be transferred to the converter at this time if additional, external switchgear is involved. The transfer must be performed in a "*break-before-make*" method to prevent damage to the converter or generator(s). The converter and generator(s) may not be operated in parallel at any time.

6.1 POWER TURN-ON PROCEDURE, cont.

6.1.2 Systems Equipped With The Seamless Transfer Option

With the converter in the Standby State (as left at the end of Section 6.1), press the GENERATOR POWER (3) display button. The generator voltage and form will now be displayed. If two generators are installed, select Generator #1 or Generator #2 by pressing the F1 (13) or F2 (13) button after selecting the GENERATOR metering screen.

NOTE: Unlike the converter and shore power displays, generator load current is not measured by the system, and as such no data can be displayed for current, kW, or kVA.

To determine generator status to the electrical system, observe the **SHIP'S POWER** button group. Two LEDs are included in this group, one next to the **SHIP'S POWER - CONVERTER** (9) button, the other next to the **SHIP'S POWER - GENERATOR** (12) button. The LED (9A) next to the **CONVERTER** button will be lit when the converter is on and supplying power to the ship's distribution grid. The LED (12A) next to the **GENERATOR** button will be lit when the generator is supplying power. The SHIP'S POWER LEDs should never be lit at the same time: only one source of energy should be connected to the ship's distribution system at any point in time. If the GENERATOR LED is lit, but the GENERATOR metering display indicates no power present, then the GENERATOR is connected to the distribution grid through its circuit breaker, but the generator is off.

⚠ WARNING ⚠

NEVER ASSUME A CIRCUIT IS INACTIVE *(WITHOUT VOLTAGE)* BY RELYING UPON THE SHORE POWER CONVERTER'S METERING SYSTEM. DO NOT ACCESS THE ELECTRICAL SYSTEM WITHOUT PROPERLY VERIFYING THE SAFETY OF THE SITUATION USING ALTERNATE MEANS.

6.1 POWER TURN-ON PROCEDURE, cont.

6.1.2 Systems Equipped With The Seamless Transfer Option, cont.

If the generator is supplying power to the ship, the SHIP'S POWER - GENERATOR LED (12A) is lit, and the GENERATOR metering display indicates approximately the same voltage as the CONVERTER metering display, then proceed by pressing the **SHIP'S POWER - CONVERTER** (9) button. In dual generator installations, the converter will determine the appropriate transfer generator and the transfer will proceed. The converter will match the generator in voltage, frequency, and phase. When the two power forms are matched, the converter will place itself momentarily in parallel with the generator, and then open the generator circuit breaker removing the generator from the distribution grid. The entire process may take up to 5 seconds to complete. The generator can now be secured from operation.

If the generator is off-line as indicated by the SHIP'S POWER - GENERATOR LED (12A) being off, the converter will immediately place itself on the ships distribution system, with no synchronization period required, when the **CONVERTER** (9) button is pushed.

When attempting transfer from the converter to the generator and the generator is off, or if its voltage is outside the allowed voltage or frequency limits, the transfer will be aborted.

When load has been transferred to the converter, monitor the converter load currents and voltages. Ensure the load is within the system ratings as indicated by the STATUS display. Monitor the shore power voltage and current levels with load applied to avoid tripping shore power breakers. Refer to published rating curves for maximum current, kVA, and kW levels. Additional loading information may be obtained on shore power and converter loading by selecting the desired source button (2, 4), then pressing **F2**, **F3**, and **F4** (13). To return to the default metering display, press **F1** (13).

6.2 MULTI-CABINET OPERATION

Multi-cabinet systems are operated from the Master's control panel. Each cabinet retains its own control panel and metering display for individual monitoring. A load management option exists that allows individual cabinets to load according to shore cord size (see section 7 for details).

Apply shore power to both cabinets and turn the disconnect switch (14) on each cabinet to the on position. Within 1-3 seconds each cabinet will start, fans will be heard, and the display will become active. Using the **SHORE POWER** (2) button on each cabinet, verify the applied shore power measures the expected form. Use the Figure 9, Front Panel Controls on page 28 for button references.

Press the **SHORE POWER ON** (7) button on the Master cabinet, bringing the Master and Slave cabinets to the standby state. The green shore power LED (7A) on the Master and Slave cabinets should now be lit. Measure the voltage being produced by the system by pressing the **CONVERTER POWER** (4) buttons on the Master and Slave cabinets: they should indicate the desired form and be within 5% of each other.

When ready to place the converter onto the ship's distribution system, press the **CONVERTER POWER ON** (8) button on the Master cabinet. This will close the output contactors of both the Master and Slave cabinets simultaneously. The green LED (8A) should light on the Master and Slave cabinets. With the ship's loads now supplied by the converter, measure the load power being supplied by each cabinet to ensure compliance to the system ratings. The system status display will indicate a summary load percentage, based upon a worst case measurement of all parameters.

If the system is equipped with the Seamless Transfer option, press the **SHIP'S POWER - CONVERTER** (9) button on the Master cabinet to transfer power from the generator to the converter. The system will operate as per the description in Section 6.1.2.

6.3 AUTO-RESTART FEATURE

The Auto-Restart feature will safely and automatically bring the shore power converter back on-line following a power failure and recovery event. Highlights include:

- Automatically routes power from the dock to the ships power buss.
- Front panel controls allow auto-restart to be enabled or disabled.
- Auto-Restart status displayed on the LCD STATUS screen.
- Fault tolerant to guarantee safe operation.
- Valid shore power verified prior to restart.
- Handles repeated power failures without operator intervention.

WARNING

- **LETHAL VOLTAGES ARE AUTOMATICALLY ROUTED WITHIN THE CONVERTER WHEN (1) INPUT POWER IS PRESENT, (2) THE DISCONNECT SWITCH IS IN THE "ON" POSITION, AND (3) AUTO-RESTART IS ENABLED.**
- **LETHAL VOLTAGES WILL BE AUTOMATICALLY ROUTED TO THE CONVERTER OUTPUT AND THE OUTPUT CONTACTOR WILL AUTOMATICALLY CLOSE WHEN (1) INPUT POWER IS PRESENT, (2) THE DISCONNECT SWITCH IS IN THE "ON" POSITION, AND (3) AUTO-RESTART IS ENABLED.**
- **NEVER REMOVE ANY PANELS OR COVERS WITHOUT SECURING (REMOVING) SHORE POWER WHEN AUTO-RESTART IS ENABLED.**
- **NEVER PERFORM MAINTENANCE OR SERVICE WHILE AUTO-RESTART IS ENABLED.**
- **NEVER ASSUME AUTO-RESTART IS DISABLED.**
- **NEVER USER THE DISCONNECT SWITCH TO TURN THE CONVERTER OFF WITH AUTO-RESTART ENABLED. THE CONVERTER CANNOT DISTINGUISH BETWEEN A VALID POWER FAILURE AND IMPROPER USE OF THE DISCONNECT SWITCH.**

6.3 AUTO-RESTART FEATURE, cont.

6.3.1 Operation

Auto-Restart must be enabled from the converter front panel by simultaneously pressing two buttons. Anytime the system status is "FAILURE," the converter will disable the Auto-Restart feature. The converter must be ON and ONLINE before Auto-Restart may be enabled. Pressing the **SYSTEM STATUS** button (5) will display the SUMMARY DISPLAY which will indicate the Auto-Restart status.

CONVERTER ACTION	FRONT PANEL OPERATION
Enable Auto-Restart	**CONVERTER POWER** (4) & **F1** (13)
Disable Auto-Restart	**CONVERTER POWER** (4) & **F2** (13)

6.4 TURN-OFF PROCEDURE

6.4.1 Systems Not Equipped With The Seamless Transfer Option

Transfer power from the converter to the generator. This must be performed in a "break-before-make" method, that is, at no time can the generator(s) and shore power converter be operated in parallel.

Disable the Auto-Restart feature if enabled.

Press the **CONVERTER POWER OFF** (11) button. The red Converter Power OFF indicator LED (11A) should now be lit. If the SUMMARY DISPLAY is active, it should indicate CONVERTER: OFFLINE. Power has now been removed from the output, but the system remains active. The system is now in the "standby" state.

Next press the **SHORE POWER OFF** (10) button. The red Shore Power indicator LED (10A) should now be lit. This will initiate the inverter shutdown. The system will complete the shutdown process within 10 seconds.

Turn the Disconnect Switch (14) to the OFF position. Open the shore power (input) circuit breaker or switch to the converter.

The converter is now shut down.

6.4.2 Systems Equipped With The Seamless Transfer Option

The generator must be started and be prepared to accept the ship's electrical loads.

Measure the generator voltage using the converter's metering display, selecting the GENERATOR POWER (3) function. The voltage and frequency must be the same as the converter's output in order for the seamless transfer option to successfully transfer power. The SHORE POWER LED (7A) must be lit at this time.

When the generator is ready to accept the ship's loads, press the **SHIP'S POWER - GENERATOR** button (12). In dual-generator installations, a display will appear requesting that the appropriate generator be selected via the **F1** and **F2** (13) buttons. In single-generator installations, the transfer will proceed. The converter will match the generator in frequency, voltage, and phase over a several second period. When the power forms are matched, the converter will close the generator circuit breaker, then open the converter output contactor, with both briefly operating in parallel. The SHIP'S POWER - CONVERTER LED (9A) should now be off, and the SHIP'S POWER - GENERATOR LED (12A) should now be lit.

With the ship's loads now being serviced by the generator, the converter may be shut down. Press the **CONVERTER POWER OFF** button (11). The red OFF LED (11A) should now be lit. The converter is now in the standby state.

Next press the **SHORE POWER OFF** button (10). The red OFF LED (10A) should now be lit, and the converter will begin an orderly shutdown. The complete shutdown process will take about 10 seconds. The converter power metering display, if observed during the process, will indicate a slow decay in the output voltage to zero. Rotate the disconnect switch (14) to the OFF position. The system is now off and power can be removed from the equipment.

6.5 REMOTE COMMUNICATIONS

The converter can be controlled remotely and be queried for alarm, electrical, and status data through its RS-232C port. The port's hardware configuration is by default RS-232C unless modified by the inclusion of the Modbus Option—which converts the default hardware protocol to the RS-485 standard via a din-rail mounted converter/optical-isolator.

The two software protocols supported by the converter are SCPI and Modbus. Please contact an ASEA Power Systems authorized distributor or the factory for additional information and comprehensive command/query listings.

The Baud Rate and fixed serial port settings can be viewed in the REMOTE INTERFACE CONFIGURATION DISPLAY (as depicted below) by pressing the SYSTEM STATUS **(5)** and F3 **(13)** buttons simultaneously. The software protocol in use is indicated in the lower-right corner (SCPI or Modbus). The software protocol is auto-detected by the converter based on the incoming command/query formatting.

```
     REMOTE INTERFACE CONFIGURATION
BAUD: 19000   8-DATA BITS,1 START,1 STOP
PARITY: NONE    EOS: CR/LF  DEVICE:  DCE
HANDSHAKING: NONE                   SCPI
```

```
     REMOTE INTERFACE CONFIGURATION
BAUD: 19000   8-DATA BITS,1 START,1 STOP
PARITY: NONE    Node Id: 3  DEVICE:  DCE
HANDSHAKING: NONE                 Modbus
```

The Baud Rate can be increased by pressing the F1 **(13)** button, and decreased by pressing the F2 **(13)** button. Press the F3 **(13)** button to change the Node Id while the software protocol is set for Modbus mode. Press the F4 **(13)** button to manually move between the SCPI and Modbus modes. Press the SYSTEM STATUS **(5)** button to save settings and exit.

Standard baud rates are 1200, 2400, 4800, 9600, 19200, and 38400 where 19200 is the standard for communication with ASEA Power Systems Touch Screens.

6.5 REMOTE COMMUNICATIONS, cont.

6.5.1 RS-232C/SCPI

The RS-232C serial port is located at the base of the Control PCB box just above the heat exchanger.

The RS-232C TxD signal originating in the converter is approximately +15V when "High" and -15V when "Low." The RS-232C GND (ground) wire is connected to the low voltage DC common of the converter power supply system, which is normally also connected to the chassis-ground of the converter. When the Metering Isolation Option is installed in the converter, the link to the chassis ground is removed.

The RS-232C serial port is a DE9S (female, 9-pin D-subminiature connector). The pinout of the connector is standard for an RS-232C DCE. Figure 10 below demonstrates connection from a DCE to a DTE. Use of a shielded, jacketed, four-wire (two twisted pairs), color-coded cable for each converter in the system is required.

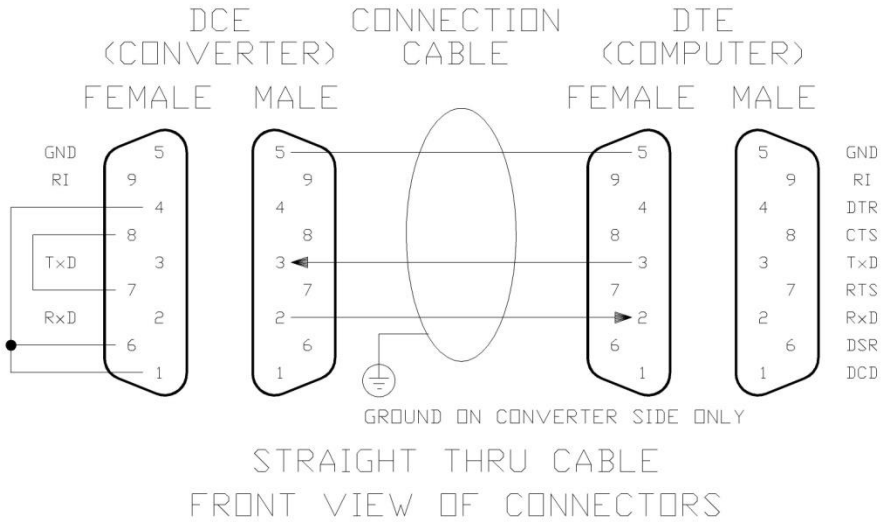

FIGURE 10 RS-232C PINOUT

It is strongly recommended that an RS-232C optical isolation be included in any RS-232C/SCPI protocol integration to avoid the creation of ground-loops and ground-fault paths through the remote communication port; such isolation is not included with the standard product.

6.5 REMOTE COMMUNICATIONS, cont.

6.5.2 RS-485/Modbus

If included in the converter, a Modbus Option converter/optical-isolator will be located adjacent to the RS-232C serial port.

The Modbus Option included converter/optical-isolator connections are depicted in Figure 11 below.

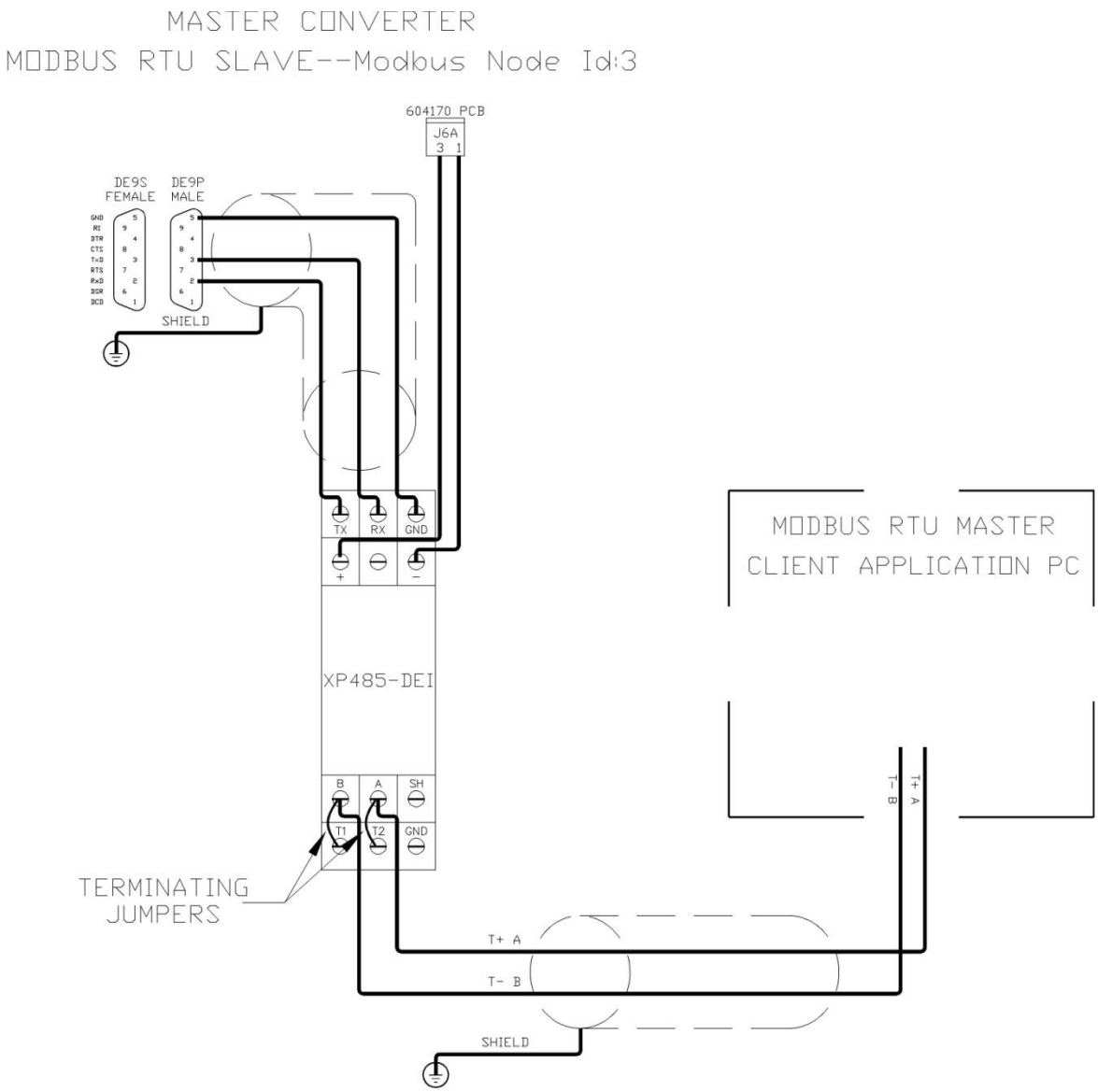

FIGURE 11 RS-485 CONNECTIONS

6.5 REMOTE COMMUNICATIONS, cont.

6.5.2 RS-485, cont.

All wiring between the converter's RS-232C port and the Modbus Option converter/optical-isolator is included and wired at the factory. RS-485 bus wiring between a master converter and slave converter(s) and ultimately to the customer side connections is the responsibility of the customer. Such wiring should be shielded as depicted in Figure 11 on the previous page.

Each converter/optical-isolator contains terminating jumpers used to link the T1 and T2 terminals to the B and A terminals, respectively, and provide internal terminating resistances. Install such jumpers as indicated in Figure 11 at the first and last device in daisy-chained RS-485 bus, but remove the jumpers for any intermediately connected devices.

A master converter's Node Id is factory set for 3; a slave converter's is set for 4. These are the default values for communication with ASEA Power Systems designed Touch Panel computers. Additional slave converters can be set for Node Id numbers greater than 4 (5-8 recommended). As ASEA Power Systems uses Node Id numbers 9-13 for GMM products, use of these should be avoided.

This page intentionally left blank

7 SOFTWARE FEATURES

7.1 GENERAL

ASEA Power Systems' shore power converters provide a variety of software-based resources. Each major function is described in detail in the following pages.

BOLD upper-case text indicates when a display button is being referenced. Where two buttons are given as **BUTTON + BUTTON**, the buttons must be pressed simultaneously.

7.2 LOAD MANAGEMENT

ASEA Power Systems' shore power converters now provide a comprehensive Load Management System. Additionally, paralleled shore power converters now provide a Load Sharing system that manages the use of different capacity shore cords. The various features are discussed in detail below.

Shore Cord Alarm

The Shore Cord Alarm drives the Voltage Droop and Automatic Transfer to Generator features of the Load Management System. The user selects a percentage between 50% and 100% at which to begin alarming. This feature may be enabled or disabled by the user.

Shore Cord Setup

The actual shore cord amperage is selected by the user from a table of available, international shore cord sizes. This selection causes the converter to now display load level and alarm based on the true available shore cord energy. The new, actual converter capacity (if less than the converter's capacity) is displayed for reference.

7.2 LOAD MANAGEMENT, cont.

Voltage Droop

If the yacht's electrical system does not include a power management system that allows for automatic load-shed, the converter's Voltage Droop feature may be used to save up to 10% capacity by reducing the converter output voltage up to 5% (1% to 5% range). This feature may be enabled or disabled by the user and droops upon Shore Cord Alarm.

Automatic Transfer to Generator

The converter system may be set to automatically transfer to generator (assuming the existence of the Seamless Transfer Option) upon Shore Cord Alarm. The Automatic Transfer would only occur after the Voltage Droop had taken effect if both were enabled. This feature may be enabled or disabled by the user. A signal generated by the converter may be used to start the selected generator. Also, a programmable warm-up delay is available.

7.3 LOAD MANAGEMENT OPERATION

7.3.1 **Shore Cord Alarm**, Single, Master, and Slave converters

If the yacht's electrical system includes a power management or load-shed feature, the Shore Cord Alarm can be used to effect a change in loading when the converter reaches a programmed load threshold, or simply draw the yacht engineer's attention.

The Shore Cord Alarm drives a relay's normally open contact pair that is provided at a terminal block near the converter's Shore Power Input terminal block. The contact pair is rated for 8A @ 250VAC or 5A @ 24VDC.

From the front panel, press the **SHORE POWER** + **F2** buttons to access the following screen (The DROOP and TRANSFER choices do not apply to a Slave converter):

```
     LOAD MANAGEMENT CONFIGURATION
SHORE CORD RATING = 125 AMPS
ALARM AT 100% OF RATING, ALARM ENABLED
Cord    Droop  Transfer  Cursor   Exit
```

The Shore Cord Alarm may be Enabled on both the Master and Slave Converters. An alarm signal will be issued whenever the Alarm is enabled and the converter's input current equals or exceeds the Alarm Level (percentage) of the shore cord Rating. Note that the Alarm MUST be Enabled for the Droop and/or Automatic Transfer to Generator features to function. Press Cord (**F1**) for the Shore Cord Setup screen, Droop (**F2**) for the Voltage Droop screen, Transfer (**F3**) for the Automatic Transfer to Generator screen, Cursor (**F4**) to move the cursor between the ALARM AT % and ALARM enable settings, and Exit (**F5**) to save the settings and exit the screen.

When the cursor is on the ALARM AT % or ALARM enable settings, the Cord/Droop buttons will change to More/Less and Enable/Disable respectively to allow for setting adjustment.

	Default	Range	Units
ALARM AT	100%	50 - 100%	% of cord capacity
ALARM enable	DISABLED	Disabled, Enabled	

SHORE CORD RATING is displayed for reference and adjusted in the Shore Cord Setup screen.

7.3 LOAD MANAGEMENT OPERATION, cont.

7.3.2 **Shore Cord Setup**, Single, Master, or Slave Converters

The Shore Cord Setup screen is used to set the actual shore cord ampacity based on the marina's dock or pedestal circuit breaker. The converter's new, programmed CONV. CAPACITY is then displayed for reference. The converter's Load Level and Power indicators for Shore Power and Converter Power will then display the actual converter capacity usage based on the programmed CONV. CAPACITY.

It is important to understand that this is an indication device, and affects reporting and alarming only. The peak and average overload capabilities are not affected by this setting. Dynamic response to loading and equipment startup surges is unaffected. The intent here is to prevent tripping of dockside circuit breakers by average loading when a smaller than desired shore supply is used.

From the front panel, press the **SHORE POWER** + **F2** buttons, and then Cord (**F1**) to access the following screen:

```
SHORE CORD SETUP   CONV.CAPACITY: 75.0kVA
MASTER CORD CAPACITY: 125 Amps
VOLTAGE: 400 Vac, FORM: 3Ø, Freq.: 50Hz
 More    Less                        Exit
```

Press More (**F1**) or Less (**F2**) to adjust the MASTER CORD CAPACITY, and Exit (**F5**) to save the settings and exit the screen.

	Default	Range	Units
CONV. CAPACITY	true capacity	based on cord capacity, voltage, and form	kVA
CORD CAPACITY	250	30, 32, 50, 60, 63, 100, 125, 150, 200, 250	Amps

The CONV. CAPACITY is calculated as: $V_{L\text{-}L} \cdot A \cdot \sqrt{3}$ and is never greater than the converter's actual rating if the shore supply size has a greater capacity than the converter.

7.3 LOAD MANAGEMENT OPERATION, cont.

7.3.3 **Voltage Droop**, Single or Master Converters

Upon Shore Alarm, the Voltage Droop feature may be used to save up to 10% converter capacity by reducing the converter output voltage up to 5%. This is offered as a solution where the yacht does not already have power management and load-shed capabilities that can be triggered with the Shore Cord Alarm signal. A recovery time is provided so that the system does not alarm and droop in an oscillatory manner as the load level moves above and below the alarm threshold. 30 minutes is the default setting and can be adjusted as appropriate to the yacht's conditions. This recovery time is the time the droop will remain in place, regardless of alarm or load level, until returning to the nominal converter output voltage. Voltage Droop will take precedence over Programmable Output Voltage settings if used.

From the front panel, press the **SHORE POWER** + **F2** buttons, and then Droop (**F2**) to access the following screen:

```
     LOAD MANAGEMENT DROOP CONTROL
Droop  5% of Vout at Shore Cord Alarm
Droop: DISABLED, Recovery in 30 minutes
More    Less    Forward   Back    Exit
```

Press the **F1** or **F2** buttons to adjust the DROOP %, DROOP enable, and Recovery settings; Forward (**F3**) to advance the cursor through the three settings; Back (**F4**) to return the cursor through the three settings, and Exit (**F5**) to save the settings and exit the screen. When the cursor is on the DROOP % or Recovery settings, the **F1**/**F2** buttons will read More/Less. When the cursor is on the DROOP enable setting, the **F1**/**F2** buttons will read Enable/Disable.

	Default	Range	Units
DROOP %	5%	1 - 5% in 1% increments	% of Vout
DROOP enable	DISABLED	DISABLED/ENABLED	
Recovery	30 minutes	1 - 60 min in 1 min increment	minutes

7.3 LOAD MANAGEMENT OPERATION, cont.

7.3.4 **Automatic Transfer to Generator**, Single or Master Converters (Seamless Transfer installed)

Upon Shore Alarm, the Automatic Transfer to Generator feature may be used to perform a Seamless Transfer to a pre-selected generator. This implies connection and setting of the Generator Autostart Control feature (needed to signal a generator to start and hold the set warm-up time before transferring). The transfer is not initiated until Voltage Droop has occurred as the load savings afforded may have taken the converter out of Shore Cord Alarm.

From the front panel, press the **SHORE POWER** + **F2** buttons, and then Transfer (**F3**) to access the following screen:

```
      TRANSFER ON OVERLOAD CONTROL
 Feature: Disabled, Select Genset: 1

Enable  Disable  Forward   Back    Exit
```

Press the **F1** or **F2** buttons to adjust the Feature or Select Genset settings; Forward (**F3**) to advance the cursor to the Select Genset setting; Back (**F4**) to return the cursor to the Feature setting, and Exit (**F5**) to save the settings and exit the screen. When the cursor is on the Feature setting, the **F1**/**F2** buttons will read Enable/Disable. When the cursor is on the Select Genset setting, the **F1**/**F2** buttons will read More/Less.

	Default	Range
Feature	DISABLED	DISABLED/ENABLED
Genset	1 - 4	

7.3 LOAD MANAGEMENT OPERATION, cont.

7.3.5 **Quick Setup of Shore Cord Alarm**, Single, Master, or Slave Converters

1. Turn on the red Disconnect switch of both converters and wait 15-20 seconds for initialization.
2. Press the **SHORE POWER** + **F2** buttons on both converters.
3. Press the Cursor (**F4**) button to advance to the ALARM AT % setting.
4. Set the converter ALARM AT % using the More/Less (**F1**/**F2**) buttons.
5. Press the Cursor (**F4**) button to advance to the ALARM enable setting.
6. Set the converter ALARM enable using the Enable/Disable (**F1**/**F2**) buttons.
7. Press the Exit (**F5**) button to save the settings and exit.
8. Turn on the converters and place online as usual. Alarm will occur when loading reaches the ALARM AT % setting.

7.4 GENERATOR FREQUENCY ANALYSIS

Press the **SYSTEM STATUS + GENERATOR POWER** buttons to access the Generator Frequency Analysis Display. Used for observing lifetime generator frequency range.

```
  GENERATOR FREQUENCY ANALYSIS DISPLAY
Generator MIN Frequency:  XX.XXHz
Generator MAX Frequency:  XX.XXHz
Refresh                           Exit
```

7.5 CONVERTER OUTPUT IMPEDANCE CONTROL

Press the **SHORE POWER + F3** (Master converter) buttons to access the CONVERTER OUTPUT IMPEDANCE CONTROL display.

```
   CONVERTER OUTPUT IMPEDANCE CONTROL
Nominal Impedance (Zo)  Duty Cycle:   50%
Transfer Impedance      Duty Cycle:  100%
 More    Less    Forward   Back     Exit
```

Press the More **(F1)** button to increase the setting, the Less **(F2)** button to decrease the setting, the Forward **(F3)** button to advance to the Transfer Impedance setting, the Back **(F4)** button to return to the Nominal Impedance setting, and the Exit **(F5)** button to save the settings and exit.

	Default	Range	Increments
Nominal Impedance Duty Cycle	50%	0 - 100%	1%
Transfer Impedance Duty Cycle	100%	0 - 100%	1%

Application: if loading-based, line-drop losses in a yacht are such that locations remote of the converter and Ship's Bus experience undesirable, lower-than-expected voltages, the Nominal Impedance Duty Cycle can be lowered via this control to increase output voltage. AGC (Automatic Gain Control-see page 51) must be disabled when using this function or the modified voltage level will be re-compensated by it. Initially, a small change (start with 5%) should be used in conjunction with re-measurement at the remote location to determine the correction needed. Drastic changes in Duty Cycle will result in equally drastic voltage changes. Transfer Impedance is usually only modified by factory trained personnel when commissioning a converter. It can be used to fine-tune the Seamless Transfer function.

7.6 AGC CONTROL

Press the **SHORE POWER + F4** buttons to access the Automatic Gain Control (AGC) CONTROL display.

```
            AGC CONTROL SCREEN
 Automatic Gain Control is:  ENABLED

Enable  Disable                    Exit
```

This function enables or disables AGC. Press the Enable **(F1)** button to enable the feature, the Disable **(F2)** button to disable the feature, and the Exit **(F5)** button to save the settings and exit.

	Default	Range
Automatic Gain Control	Enabled	Enabled, Disabled

Application: this function will compensate for changes in output voltage not already corrected by hardware and software calibration such as load-dependent output voltage variances. This function should be disabled before calibrating the hardware oscillator and current compensation pots on the Modulator Interface PCB (usually only done when initially setting the output voltage configuration at the factory). It must be disabled when using Converter Output Impedance Control (see page 54).

7.7 kW-HOUR METER AND MAXIMUM POWER LEVEL DISPLAY

Press the SHORE POWER + CONVERTER POWER buttons to access the Automatic KW-HOUR METER and maximum power level display.

```
                KW-HOUR METER
kW-Hours:XXXXXXX.XX Run Time. XX:XX:XX:XX
 Max. Level: XXX.X%   Max. Power: XX.XXkW
 Clear                             Exit
```

Press the Clear **(F1)** button to clear all data and the Exit **(F5)** button to exit.

Application: this reference kW-hour meter can be used to check the billing received in a marina. Immediately after connecting shore power and turning the converter's red disconnect switch, clear the data in this screen. When ready to leave, take down the kW-hours and run time before disconnecting the shore power. Additionally, this screen can be used to diagnose converter shutdowns. Since the Max. Level and Max. Power data are updated with slow-response metering (approximately 1 second), only average use data are represented. Instantaneous motor-start surges and such will not be represented by the data. If the Max. Level exceeds 110%, and a shutdown of the Shore Power has occurred, it is very likely the average loading is exceeding the converter's capacity. The Max. Power is provided since Max. Level is affected by Shore Cord Setup settings.

7.8 CONVERTER OUTPUT VOLTAGE CONTROL

Press the **CONVERTER POWER + F5** buttons to access the CONVERTER OUTPUT VOLTAGE CONTROL display.

```
   CONVERTER OUTPUT VOLTAGE CONTROL
Vout = XXX.X

More    Less     XXXV             Exit
```

This function allows the user to increase or decrease the converter output voltage (Vout). Press the More **(F1)** button to increase the Vout, the Less **(F2)** button to decrease the Vout, the XXXV **(F3)** button to return Vout to the factory programmed setting, and the Exit **(F5)** button to save the setting and exit.

	Default	Range	Increments
Vout	factory prog. voltage	+/-5%	0.5 volts

Application: if the line-drop losses in a yacht are such that locations remote of the converter and Ship's Bus experience undesirable, lower-than-expected voltages, the programmed Vout can be raised up to 5% via this function. Also, to decrease total power usage, the Vout could be reduced up to 5%. The new, programmed Vout will be used as the basis for AGC, Seamless Transfer, and all other voltage dependent functions.

7.9 EVENT LOG

Press the **EVENT LOG** (or **CALIBRATE** on older converters) button to access the EVENT LOG display.

```
        EVENT LOG CONTROL SCREEN
F1: EVENT LOG VIEWER        XXXX Events
F2: EVENT LOG TRACKER
F3: EVENT LOG REGISTRY
```

This is for monitoring internal converter logic operation. Press the **SYSTEM STATUS** button in any screen to exit.

Press the **F1** button to access the EVENT LOG VIEWER display.

```
            EVENT LOG VIEWER
XXX:XX:XX:XX:XX  ****START_LOG****
XXX:XX:XX:XX:XX
XXX:XX:XX:XX:XX
```

This is for reviewing all past events (1000 max.) since the log was last cleared. Press the **F1** button to scroll down (newer events). Press the **F2** button to scroll up (older events).

Press the **F2** button to access the EVENT LOG TRACKER display.

```
XXX:XX:XX:XX:XX
XXX:XX:XX:XX:XX
XXX:XX:XX:XX:XX
XXX:XX:XX:XX:XX
```

This is for reviewing events as they occur.

7.9 EVENT LOG, cont.

Press the **F3** button to access the EVENT LOG REGISTRY display.

```
        EVENT LOG REGISTRY
PRESS: ‘SHORE POWER’ to edit Registry,
The ‘F1’ for log On & ‘F2’ for log Off.
Press: ‘F4’ to CLEAR EVENT LOG.
```

This is for accessing the editing display and for clearing the log.

Press the **SHORE POWER** button to access the EVENT LOG REGISTRY edit display.

```
           EVENT LOG REGISTRY
Event Name:  Ev VOID             ID: 0
 Logging for the Event is : ON
Press: ‘F4’ to CLEAR EVENT LOG.
```

This is for editing which events are logged and clearing the log. Press the **F1** button to turn logging ON for the Event. Press the **F2** button to turn logging OFF for the Event.

Press the **F4** button to access the EVENT LOG REGISTRY CLEARED display.

```
        EVENT LOG REGISTRY
PRESS: ‘SHORE POWER’ to edit Registry,
The ‘F1’ for log On & ‘F2’ for log Off.
ALL EVENT LOG ENTRIES CLEARED.
```

8 DIAGNOSTICS

As previously described in paragraph 6.1, the converter's LCD display will initiate on turn-on in the SUMMARY DISPLAY indicating the converter's operational state. Return to this screen at any time by pressing the **SYSTEM STATUS** (5) button. In the event of a converter failure or over-temperature condition, "WARNING" or "FAILURE" may flash in the lower right-hand corner of this display. If this occurs, press the **F5** (13) button to bring up a plain-language display which details the cause of the warning or failure condition. By pressing the **F1** and **F2** (13) buttons simultaneously, the warning or failure condition will clear if the event causing the warning or failure has ended and "WARNING" or "FAILURE" will discontinue flashing. Pressing the **F5** (13) button will now bring up the SYSTEM IDENTIFICATION DISPLAY where the software version can be read from.

```
ASEA MARINE CONVERTER  SYSTEM STATUS: OK
AC MARINE POWER CONVERTER Version X.XX
       ©200X ASEA POWER SYSTEMS
   HOURS OF OPERATION         XX:XX:XX
```

8 DIAGNOSTICS, cont.

To aid in system diagnostics, three status words have been provided in the STATUS WORD DISPLAY which is accessed by pressing the SYSTEM STATUS **(5)** and F2 **(13)** buttons simultaneously.

```
BIT: FEDCBA9876543210      CON: XXXXXXXX
SW1: XXXXXXXXXXXXXXXX      STATUS1: XXXX
SW2: XXXXXXXXXXXXXXXX      STATUS2: XXXX
SW3: XXXXXXXXXXXXXXXX      STATUS3: XXXX
```

Each word is comprised of 16 digits, each indicating a separate internal logic term (see Figure 12 on the following page for a description of the individual bits). On the right-hand side of the STATUS WORD DISPLAY, the same information is given in HEX format. If reporting problems to the factory, please use the HEX format (example... STATUS 1: DF85) to reduce the chance of transcription error.

If a problem has been encountered by the system, carefully record the status words before removing power to the system. When calling the factory for assistance, please have the config word in hex, status words in hex, model number, serial number, and software version.

8 DIAGNOSTICS, cont.

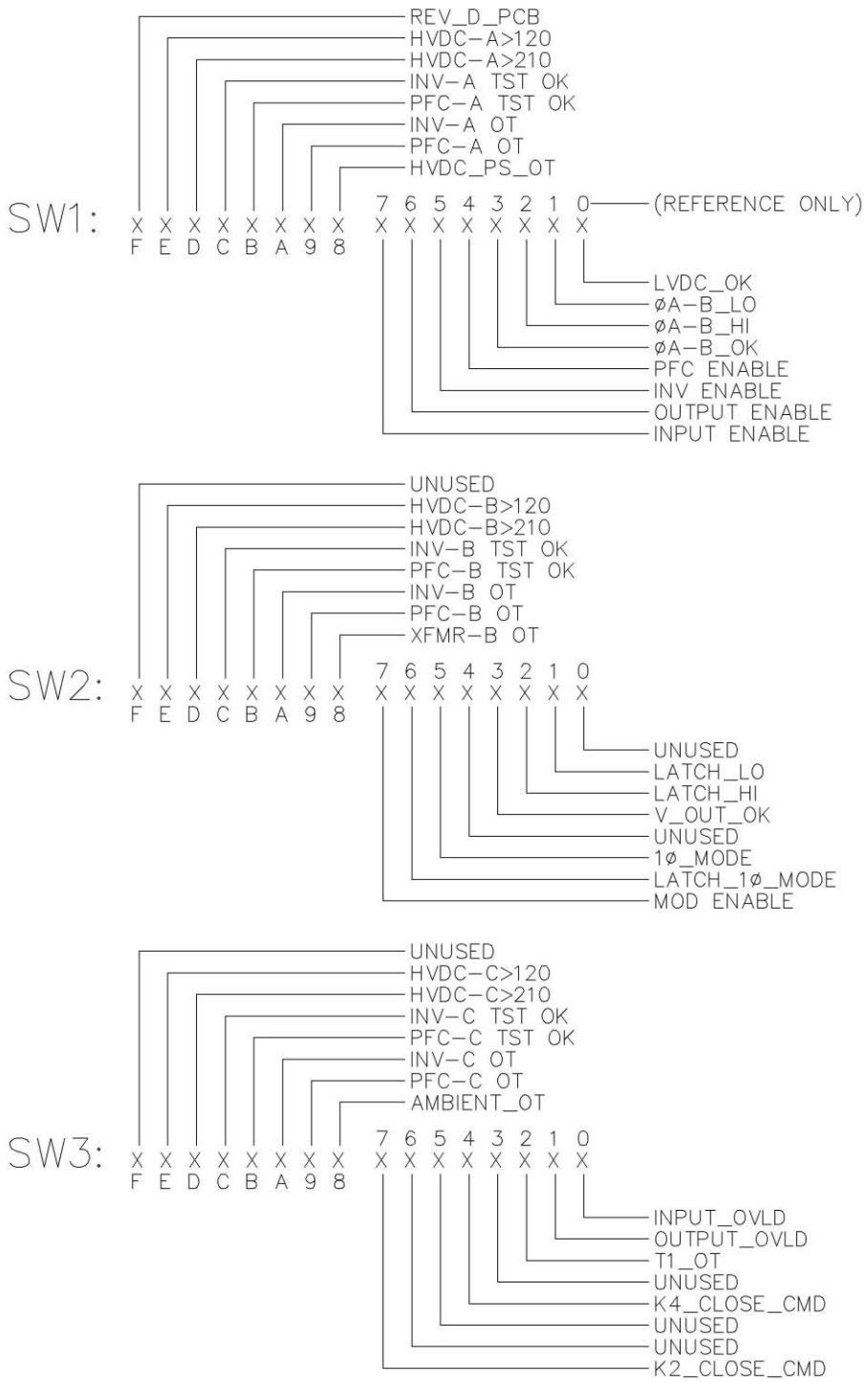

FIGURE 12 STATUS BIT DEFINITIONS

9 CALIBRATION

In an uncalibrated state the input and output voltage and input current metering system should be within 3%. The uncalibrated output current meter is normally 5% low. For calibration an external reference voltmeter will be required along with a calibrated current transformer or probe. If the system is to be calibrated on board using the yacht's loads, attempt to shut down all transient (fluctuating) loads if possible. Cyclic loads will complicate the current meter calibration process.

This procedure must also be followed after replacing the battery on a maintenance basis

WARNING

1) Turn the system off and secure input power. Remove the front cover.

2) Remove the lower front protective panel from the system, and set it aside. The input and output power terminal blocks will be located at the bottom of the power panel located in the lower compartment. Refer to the installation section of the Operations Manual for additional information. Re-apply power to the system and bring the system on-line. Transfer the yacht's load (or external test load bank) to the converter.

3) **Shore Power Calibration** - Press the **SHORE POWER** (2) button under the LCD (1) display. Use an external reference meter and current transformer or clamp to measure the input (shore power) power at the input terminal block. To enter the meter calibration screen, press and hold the **SHORE POWER** (2) button down for 7 seconds, or until the calibration display appears, then release the button. Use the **SHORE POWER** (2) button to move the cursor to the parameter to be calibrated, voltage or current. Change the selected parameter by pressing the **F1** button to increment and the **F2** button to decrement the displayed value. When all displayed values equal the values measured by the reference meter, pressing the **SYSTEM STATUS** (5) will store the new calibration values and return the display to the System Status display. Press the **SHORE POWER** (2) button to verify proper shore power meter calibration.

9 CALIBRATION, cont.

4) **Converter Power Calibration -** The CONVERTER POWER calibration works in a fashion similar to the SHORE POWER calibration described above. Press and hold the **CONVERTER POWER** (4) button for 7 seconds, or until the converter power calibration display appears. Move the reference meter probes from the input to the output terminal blocks. Then use the **CONVERTER POWER** (4) button to move the cursor to the parameter to be calibrated. The **F1** button will increment the displayed value, the **F2** button will decrement it. Press the **SYSTEM STATUS** (5) button to exit the calibration function. Select the **CONVERTER POWER** (4) display to verify the calibration correction factors have been stored.

5) **Generator Power Calibration** - Use an external reference voltmeter to measure the generator voltage at the generator terminals located on TB12-1, 2, 3, 4. To enter the meter calibration screen, press and hold the **GENERATOR POWER** (3) button down for 7 seconds, or until the calibration display appears, then release the button. Use the **GENERATOR POWER** (3) button to move the cursor to the voltage phase to be calibrated. Calibrate the selected parameter by pressing the **F1** button to increment and the **F2** button to decrement the displayed value. When all displayed values equal the values measured by the reference meter, pressing the **SYSTEM STATUS** (5) will store the new calibration values and return the display to the System Status display. Press the **GENERATOR POWER** (3) button to verify proper shore power meter calibration.

NOTE: Calibration of the Generator Metering Display is required only when the Seamless Transfer option is installed

10 MAINTENANCE

Due to the design and construction of the converter, preventative maintenance is held to a modest level. The following table lists minimum recommended tasks and frequency.

TASK	FREQUENCY	COMMENTS
Tighten electrical connections ⚠ WARNING ⚠	Every 6 months	Must be adjusted by the user based upon experience in the environment. Frequency will vary due to wire gauge, wire type, and applied vibration. **Refer to licensed electrician or factory authorized technician**.
Check for evidence of water or oil leaks near the converter base ⚠ WARNING ⚠	Every month	May require greater frequency with excessive vibration, or impact forces applied to the yacht. **Inspect near the base, or refer to factory authorized technician.**
Calibration ⚠ WARNING ⚠	Every year	Calibration required after battery replacement. Lack of calibration may result in a 2% decrease in metering and voltage programming accuracy. **Refer to factory authorized technician.**
Replace heat exchanger ⚠ WARNING ⚠	Every three years	The heat exchange unit may degrade over time due to water erosion of the cuprous nickel tubing and/or electrolysis depending on the installation characteristics. To ensure proper operation of the cooling system, it is strongly recommended that the unit be replaced periodically. **Refer to factory authorized technician.**

11 MSDS SHEET, COOLANT OIL

Diala® Oil AX
MSDS# 60030E
Version 16.0
Effective Date 07/08/2008
According to OSHA Hazard Communication Standard, 29 CFR 1910.1200

Material Safety Data Sheet

1. MATERIAL AND COMPANY IDENTIFICATION

Material Name : **Diala® Oil AX**
Uses : Insulating oil.

Manufacturer/Supplier : **SOPUS Products**
PO Box 4427
Houston, TX 77210-4427
USA
MSDS Request : 877-276-7285

Emergency Telephone Number
Spill Information : 877-242-7400
Health Information : 877-504-9351

2. COMPOSITION/INFORMATION ON INGREDIENTS

The highly refined mineral oil contains <3% (w/w) DMSO-extract, according to IP346.
Highly refined mineral oils and additives.

3. HAZARDS IDENTIFICATION

Emergency Overview

Appearance and Odour : Brown. Liquid. Slight hydrocarbon.

Health Hazards : Not classified as dangerous for supply or conveyance.
Safety Hazards : Not classified as flammable but will burn.
Environmental Hazards : Not classified as dangerous for the environment.

Health Hazards : Not expected to be a health hazard when used under normal conditions.

Health Hazards
Inhalation : Under normal conditions of use, this is not expected to be a primary route of exposure.
Skin Contact : Prolonged or repeated skin contact without proper cleaning can clog the pores of the skin resulting in disorders such as oil acne/folliculitis.
Eye Contact : May cause slight irritation to eyes.
Ingestion : Low toxicity if swallowed.
Other Information : Used oil may contain harmful impurities.
Signs and Symptoms : Oil acne/folliculitis signs and symptoms may include formation of black pustules and spots on the skin of exposed areas. Ingestion may result in nausea, vomiting and/or diarrhoea.
Aggravated Medical Condition : Pre-existing medical conditions of the following organ(s) or organ system(s) may be aggravated by exposure to this material: Skin.
Environmental Hazards : Not classified as dangerous for the environment.
Additional Information : Under normal conditions of use or in a foreseeable emergency,

11 MSDS SHEET, COOLANT OIL, cont.

this product does not meet the definition of a hazardous chemical when evaluated according to the OSHA Hazard Communication Standard, 29 CFR 1910.1200.

4. FIRST AID MEASURES

General Information	:	Not expected to be a health hazard when used under normal conditions.
Inhalation	:	No treatment necessary under normal conditions of use. If symptoms persist, obtain medical advice.
Skin Contact	:	Remove contaminated clothing. Flush exposed area with water and follow by washing with soap if available. If persistent irritation occurs, obtain medical attention.
Eye Contact	:	Flush eye with copious quantities of water. If persistent irritation occurs, obtain medical attention.
Ingestion	:	In general no treatment is necessary unless large quantities are swallowed, however, get medical advice.
Advice to Physician	:	Treat symptomatically.

5. FIRE FIGHTING MEASURES

Clear fire area of all non-emergency personnel.

Flash point	:	> 200 °C / 392 °F (COC)
Upper / lower Flammability or Explosion limits	:	Typical 1 - 10 %(V)(based on mineral oil)
Auto ignition temperature	:	> 320 °C / 608 °F
Specific Hazards	:	Hazardous combustion products may include: A complex mixture of airborne solid and liquid particulates and gases (smoke). Carbon monoxide. Unidentified organic and inorganic compounds.
Suitable Extinguishing Media	:	Foam, water spray or fog. Dry chemical powder, carbon dioxide, sand or earth may be used for small fires only.
Unsuitable Extinguishing Media	:	Do not use water in a jet.
Protective Equipment for Firefighters	:	Proper protective equipment including breathing apparatus must be worn when approaching a fire in a confined space.

6. ACCIDENTAL RELEASE MEASURES

Avoid contact with spilled or released material. For guidance on selection of personal protective equipment see Chapter 8 of this Material Safety Data Sheet. See Chapter 13 for information on disposal. Observe all relevant local and international regulations.

Protective measures	:	Avoid contact with skin and eyes. Use appropriate containment to avoid environmental contamination. Prevent from spreading or entering drains, ditches or rivers by using sand, earth, or other appropriate barriers.
Clean Up Methods	:	Slippery when spilt. Avoid accidents, clean up immediately. Prevent from spreading by making a barrier with sand, earth or other containment material. Reclaim liquid directly or in an

11 MSDS SHEET, COOLANT OIL, cont.

absorbent. Soak up residue with an absorbent such as clay, sand or other suitable material and dispose of properly.

Additional Advice : Local authorities should be advised if significant spillages cannot be contained.

7. HANDLING AND STORAGE

General Precautions : Use local exhaust ventilation if there is risk of inhalation of vapours, mists or aerosols. Properly dispose of any contaminated rags or cleaning materials in order to prevent fires. Use the information in this data sheet as input to a risk assessment of local circumstances to help determine appropriate controls for safe handling, storage and disposal of this material.

Handling : Avoid prolonged or repeated contact with skin. Avoid inhaling vapour and/or mists. When handling product in drums, safety footwear should be worn and proper handling equipment should be used.

Storage : Keep container tightly closed and in a cool, well-ventilated place. Use properly labelled and closeable containers. Storage Temperature: 0 - 50 °C / 32 - 122 °F

Recommended Materials : For containers or container linings, use mild steel or high density polyethylene.

Unsuitable Materials : PVC.

Additional Information : Polyethylene containers should not be exposed to high temperatures because of possible risk of distortion.

8. EXPOSURE CONTROLS/PERSONAL PROTECTION

Occupational Exposure Limits

Material	Source	Type	ppm	mg/m3	Notation
Oil mist, mineral	ACGIH	TWA(Mist.)		5 mg/m3	
Oil mist, mineral	ACGIH	STEL(Mist.)		10 mg/m3	

Exposure Controls : The level of protection and types of controls necessary will vary depending upon potential exposure conditions. Select controls based on a risk assessment of local circumstances. Appropriate measures include: Adequate ventilation to control airborne concentrations. Where material is heated, sprayed or mist formed, there is greater potential for airborne concentrations to be generated.

Personal Protective Equipment : Personal protective equipment (PPE) should meet recommended national standards. Check with PPE suppliers.

Respiratory Protection : No respiratory protection is ordinarily required under normal conditions of use. In accordance with good industrial hygiene practices, precautions should be taken to avoid breathing of material. If engineering controls do not maintain airborne

11 MSDS SHEET, COOLANT OIL, cont.

		concentrations to a level which is adequate to protect worker health, select respiratory protection equipment suitable for the specific conditions of use and meeting relevant legislation. Check with respiratory protective equipment suppliers. Where air-filtering respirators are suitable, select an appropriate combination of mask and filter. Select a filter suitable for combined particulate/organic gases and vapours [boiling point >65 °C (149 °F)].
Hand Protection	:	Where hand contact with the product may occur the use of gloves approved to relevant standards (e.g. Europe: EN374, US: F739) made from the following materials may provide suitable chemical protection: PVC, neoprene or nitrile rubber gloves. Suitability and durability of a glove is dependent on usage, e.g. frequency and duration of contact, chemical resistance of glove material, glove thickness, dexterity. Always seek advice from glove suppliers. Contaminated gloves should be replaced. Personal hygiene is a key element of effective hand care. Gloves must only be worn on clean hands. After using gloves, hands should be washed and dried thoroughly. Application of a non-perfumed moisturizer is recommended.
Eye Protection	:	Wear safety glasses or full face shield if splashes are likely to occur.
Protective Clothing	:	Skin protection not ordinarily required beyond standard issue work clothes.
Monitoring Methods	:	Monitoring of the concentration of substances in the breathing zone of workers or in the general workplace may be required to confirm compliance with an OEL and adequacy of exposure controls. For some substances biological monitoring may also be appropriate.
Environmental Exposure Controls	:	Minimise release to the environment. An environmental assessment must be made to ensure compliance with local environmental legislation.

9. PHYSICAL AND CHEMICAL PROPERTIES

Appearance	:	Brown. Liquid.
Odour	:	Slight hydrocarbon.
pH	:	Not applicable.
Initial Boiling Point and Boiling Range	:	> 280 °C / 536 °F estimated value(s)
Dropping point	:	Typical 190 °C / 374 °F
Flash point	:	> 200 °C / 392 °F (COC)
Upper / lower Flammability or Explosion limits	:	Typical 1 - 10 %(V) (based on mineral oil)
Auto-ignition temperature	:	> 320 °C / 608 °F
Vapour pressure	:	< 0.5 Pa at 20 °C / 68 °F (estimated value(s))
Density	:	Typical 900 g/cm3 at 15 °C / 59 °F
Water solubility	:	Negligible.
n-octanol/water partition coefficient (log Pow)	:	> 6 (based on information on similar products)
Kinematic viscosity	:	Data not available
Vapour density (air=1)	:	> 1 (estimated value(s))

11 MSDS SHEET, COOLANT OIL, cont.

Evaporation rate (nBuAc=1) : Data not available

10. STABILITY AND REACTIVITY

Stability	:	Stable.
Conditions to Avoid	:	Extremes of temperature and direct sunlight.
Materials to Avoid	:	Strong oxidising agents.
Hazardous Decomposition Products	:	Hazardous decomposition products are not expected to form during normal storage.

11. TOXICOLOGICAL INFORMATION

Basis for Assessment	:	Information given is based on data on the components and the toxicology of similar products.
Acute Oral Toxicity	:	Expected to be of low toxicity: LD50 > 5000 mg/kg , Rat
Acute Dermal Toxicity	:	Expected to be of low toxicity: LD50 > 5000 mg/kg , Rabbit
Acute Inhalation Toxicity	:	Not considered to be an inhalation hazard under normal conditions of use.
Skin Irritation	:	Expected to be slightly irritating. Prolonged or repeated skin contact without proper cleaning can clog the pores of the skin resulting in disorders such as oil acne/folliculitis.
Eye Irritation	:	Expected to be slightly irritating.
Respiratory Irritation	:	Inhalation of vapours or mists may cause irritation.
Sensitisation	:	Not expected to be a skin sensitiser.
Repeated Dose Toxicity	:	Not expected to be a hazard.
Mutagenicity	:	Not considered a mutagenic hazard.
Carcinogenicity	:	Product contains mineral oils of types shown to be non-carcinogenic in animal skin-painting studies. Highly refined mineral oils are not classified as carcinogenic by the International Agency for Research on Cancer (IARC). Other components are not known to be associated with carcinogenic effects.
Reproductive and Developmental Toxicity	:	Not expected to be a hazard.
Additional Information	:	Used oils may contain harmful impurities that have accumulated during use. The concentration of such impurities will depend on use and they may present risks to health and the environment on disposal. ALL used oil should be handled with caution and skin contact avoided as far as possible.

12. ECOLOGICAL INFORMATION

Ecotoxicological data have not been determined specifically for this product. Information given is based on a knowledge of the components and the ecotoxicology of similar products.

Acute Toxicity	:	Poorly soluble mixture. May cause physical fouling of aquatic organisms. Expected to be practically non toxic: LL/EL/IL50 > 100 mg/l (to aquatic organisms) (LL/EL50 expressed as the nominal amount of product required to prepare aqueous test extract). Mineral oil is not expected to cause any chronic effects to aquatic organisms at concentrations less than 1 mg/l.

11 MSDS SHEET, COOLANT OIL, cont.

Mobility	:	Liquid under most environmental conditions. Floats on water. If it enters soil, it will adsorb to soil particles and will not be mobile.
Persistence/degradability	:	Expected to be not readily biodegradable. Major constituents are expected to be inherently biodegradable, but the product contains components that may persist in the environment.
Bioaccumulation	:	Contains components with the potential to bioaccumulate.
Other Adverse Effects	:	Product is a mixture of non-volatile components, which are not expected to be released to air in any significant quantities. Not expected to have ozone depletion potential, photochemical ozone creation potential or global warming potential.

13. DISPOSAL CONSIDERATIONS

Material Disposal	:	Recover or recycle if possible. It is the responsibility of the waste generator to determine the toxicity and physical properties of the material generated to determine the proper waste classification and disposal methods in compliance with applicable regulations. Do not dispose into the environment, in drains or in water courses.
Container Disposal	:	Dispose in accordance with prevailing regulations, preferably to a recognised collector or contractor. The competence of the collector or contractor should be established beforehand.
Local Legislation	:	Disposal should be in accordance with applicable regional, national, and local laws and regulations.

14. TRANSPORT INFORMATION

US Department of Transportation Classification (49CFR)
This material is not subject to DOT regulations under 49 CFR Parts 171-180.

IMDG
This material is not classified as dangerous under IMDG regulations.

IATA (Country variations may apply)
This material is not classified as dangerous under IATA regulations.

15. REGULATORY INFORMATION

The regulatory information is not intended to be comprehensive. Other regulations may apply to this material.

Federal Regulatory Status

Notification Status

EINECS	All components listed or polymer exempt.
TSCA	All components listed.

11 MSDS SHEET, COOLANT OIL, cont.

DSL All components listed.

SARA Hazard Categories (311/312)
No SARA 311/312 Hazards.

State Regulatory Status

California Safe Drinking Water and Toxic Enforcement Act (Proposition 65)

This material does not contain any chemicals known to the State of California to cause cancer, birth defects or other reproductive harm.

16. OTHER INFORMATION

NFPA Rating (Health, Fire, Reactivity)	:	0, 1, 0
MSDS Version Number	:	16.0
MSDS Effective Date	:	07/08/2008
MSDS Revisions	:	A vertical bar (|) in the left margin indicates an amendment from the previous version.
MSDS Regulation	:	The content and format of this MSDS is in accordance with the OSHA Hazard Communication Standard, 29 CFR 1910.1200.
MSDS Distribution	:	The information in this document should be made available to all who may handle the product.
Disclaimer	:	The information contained herein is based on our current knowledge of the underlying data and is intended to describe the product for the purpose of health, safety and environmental requirements only. No warranty or guarantee is expressed or implied regarding the accuracy of these data or the results to be obtained from the use of the product.

12 INTERNATIONAL POWER FORM REFERENCE

Country	Frequency	Nominal Voltage	Comments
American Samoa	60Hz	120/240 277/480	
Antigua	60Hz	230/400	
Argentina	50Hz	220/380	
Aruba	60Hz	127/220 115/230	
Australia	50Hz	240/415 250/435	
Azores	50Hz	110/190 220/380	
Bahamas	60Hz	120/240 120/208	
Bahrain	50Hz 60Hz	230/400 110/220	
Balearic Islands	50Hz	127/220 220/380	
Barbados	50Hz	115/230 115/200	
Belgium	50Hz	220/380	
Belize	60Hz	110/220	

		250/440	
Benin	50Hz	220/380	
Bermuda	60Hz	120/240 120/208	
Brazil	60Hz	115/230 127/220 220/380	
Brunei	50Hz	240/415	
Bulgaria	50Hz	220/380	
Burma	50Hz	230/400	
Canada	60Hz	120/240 120/208 277/480	
Canary Islands	50Hz	127/220 220/380	
Cape Verde	50Hz	220/380	
Cayman Islands	60Hz	120/240 120/208	
Chile	50Hz	220/380	
China (PRC)	50Hz	220/380	
Columbia	60Hz	110/220 120/208 150/260	

Costa Rica	60Hz	120/240 120/208	
Cyprus	50Hz	240/415	
Denmark	50Hz	220/380	
Dominica	50Hz	230/400	
Dominican Republic	60Hz	120/240 120/208	
Ecuador	60Hz	120/240 120/208	
Fiji	50Hz	240/415	
Finland	50Hz	220/380	
France	50Hz	115/230 115/200 220/380	
Gibraltar	50Hz	240/415	
Greece	50Hz	220/380	
Greenland	50Hz	220/380	
Grenada	50Hz	230/400	
Guadelupe	50Hz	220/380	
Guam	60Hz	110/220 120/208	
Guatemala	60Hz	120/240	

		120/208	
Haiti	60Hz	110/220 120/208	
Honduras	60Hz	110/220 120/208	
Hong Kong	50Hz	220/380	
Ireland	50Hz	220/380	
Israel	50Hz	230/400	
Italy	50Hz	127/220 220/380	
Jamaica	50Hz	110/220	
Japan	50Hz 60Hz	100/200 100/200	
Korea	60Hz	110/220 220/380	
Kuwait	50Hz	240/415	
Madagascar	50Hz	127/220 220/380	
Malaysia	50hz	240/415	
Maldives	50Hz	230/400	
Malta	50Hz	240/415	
Martinique	50Hz	220/380	

Mauritius	50Hz	230/400	
Mexico	60Hz	127/220	
Monaco	50Hz	127/220 220/380	
Montserrat	60Hz	230/400	
Morocco	50Hz	127/220 220/380	
Netherlands	50Hz	220/380	
Netherlands Antilles	50Hz 60Hz	127/220 220/380 120/240	
New Caledonia	50Hz	220/380	
New Zealand	50Hz	230/400	
Norway	50Hz	230/400	
Panama	60Hz	110/220 120/208	
Philippines	60Hz	115/230	
Portugal	50Hz	220/380	
Puerto Rico	60Hz	120/240 120/208	
St. Kitts	60Hz	230/400	
St. Lucia	50Hz	240/415	

St. Vincent	50Hz	230/400	
Saudi Arabia	60Hz	127/220	
Seychelles	50Hz	240/415	
Sierra Leone	50Hz	230/400	
Singapore	50Hz	230/400	
South Africa	50Hz	220/380	
Spain	50Hz	127/220 220/380	
Sweden	50Hz	220/380	
Tahiti	60Hz	127/220	
Taiwan	60Hz	110/220 120/208	
Thailand	50Hz	220/380	
Togo	50Hz	127/220 220/380	
Trinidad	60Hz	115/230 230/400	
Tunisia	50Hz	127/220 220/380	
United Arab Emirates	50Hz	230/400	
United Kingdom	50Hz	240/415	

Uruguay	50Hz	220/380	
Venezuela	60Hz	120/240 120/208	
Amer. Virgin Islands	60Hz	120/240 120/208	